1C551-2

YAMAHA

COMBO KEYBOARD INSTRUMENTS

GS1/GS2

GS1

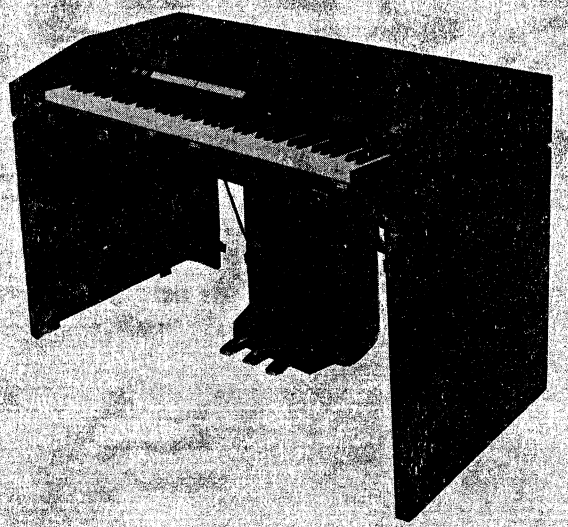

GS2

SERVICE MANUAL

006455

'81.3 0.9K Printed in Japan

CONTENTS(目次)

CODING GUIDE(活用の手引)..... 1
SPECIFICATIONS(総合仕様)..... 3
GS1 UNIT LAYOUT..... 5
GS1 PANEL LAYOUT..... 6
GS2 PANEL LAYOUT, UNIT LAYOUT..... 9
Block Diagram..... 12
GS1 ASSEMBLY PROCEDURE(組立手順)..... 15
GS1 DISASSEMBLY PROCEDURE(分解手順)..... 18
GS2 ASSEMBLY PROCEDURE(組立手順)..... 22
GS2 DISASSEMBLY PROCEDURE(分解手順)..... 25
LSI PIN FUNCTION..... 29
FM Circuit Diagram..... 42
FM Circuit Board & Wiring..... 45
KC Circuit Board & Wiring..... 48
MPX (GS1) Circuit Board & Wiring..... 51
RW Circuit Board & Wiring..... 54
A Circuit Board & Wiring..... 57
MK1 (GS1), MK4 (GS2) Circuit Board & Wiring..... 60
MK2 (GS1), MK3 (GS2) Circuit Board & Wiring..... 63
PCA, PCB (GS1) Circuit Board & Wiring..... 66
DC (GS1) Circuit Board & Wiring..... 69
DC (GS2) Circuit Board & Wiring..... 71
AC Circuit Board & Wiring..... 73
PN (EQ, SEL-R, SER-L, TET) <**GS1**> Circuit Board & Wiring..... 75
PN (CN, DET, EFF) <**GS1**> Circuit Board & Wiring..... 77
PN (EQ, SEL-R, SEL-L, EFF, STO) <**GS2**> Circuit Board & Wiring..... 79
Other Circuit Boards Wiring..... 81
CARD READER UNIT Circuit Diagram..... 83
CARD READER UNIT Circuit Board & Wiring..... 85
PARTS LIST

CODING GUIDE(活用の手引)

1, 回路図の見方 CIRCUIT DIAGRAM

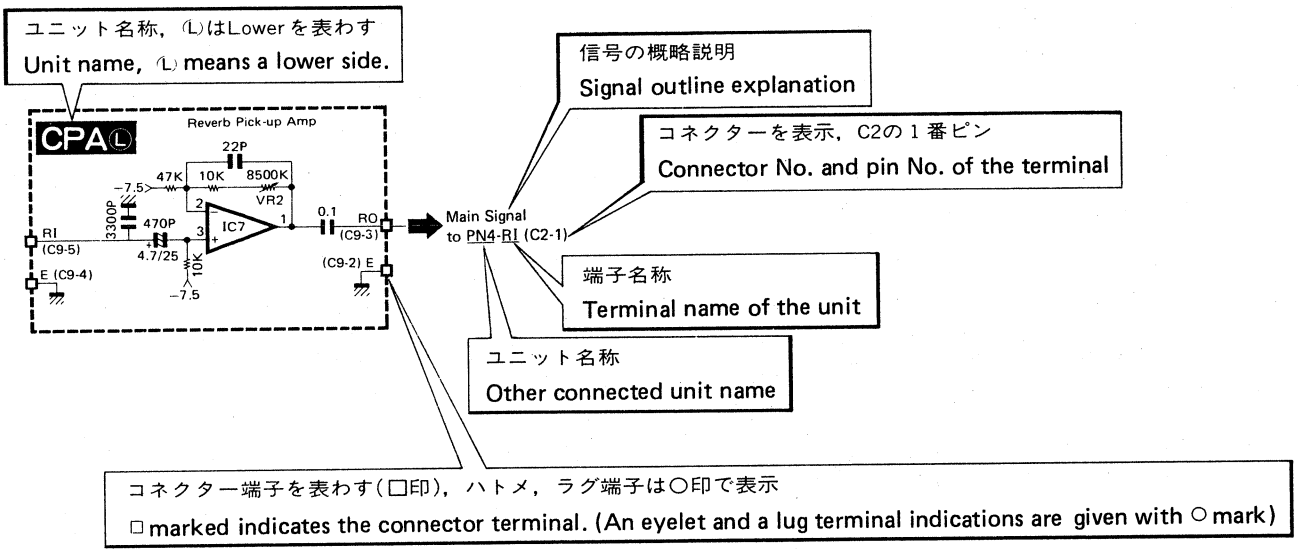

上図はCPAⓁユニット，コネクター＃9の3番端子ROよりパネル4のコネクター＃2の1番端子R1へ結線されている事を示しています。
尚，総合回路図において，信号およびデータラインの結線を，複雑さを避ける為にまとめて表示している場合がありますが，同一端子名どうしが結ばれる時は，行先端子名を表記せず，異なる端子と接続する相手端子を表記しています。

Above is a sample interconnecting code that is assigned to terminal RO of connector 9, pin 3 on CPA circuit board, the line from the RO connects to the terminal RI of connector 2, pin 1 on PN1 circuit board. In an overall circuit diagram, in order to avoid your confusion the signal lines and data lines have been mixed to be one line. In this case, when output terminal name and other connected terminal name is the same, its name is not written on the line, however, when the other terminal have a differ name, its name is shown on the line.

(例)

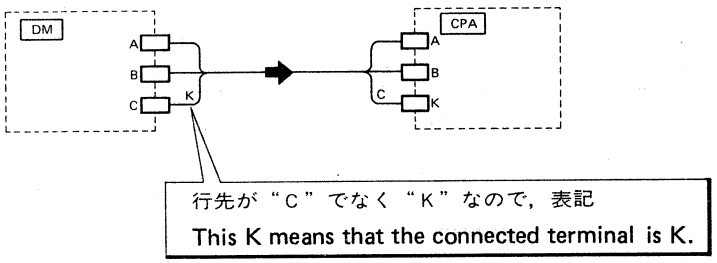

★信号表示

キーコードデータ(オシロスコープで測定可)	Key code data	(possible to measure with a oscilloscope)
パルス形信号(オシロスコープで測定可)	Pulse form signal	(— do. —)
トリガーパルス(オシロスコープで測定可)	Trigger pulse	(— do. —)
楽音信号(シグナルトレーサーで可聴)	Audio signal	(possible to measure with signal tracer)
低周波変調信号(テスターで測定可)	Low frequency modulation signal	(possible to measure with VOM)
DCコントロール(テスターで測定可)	DC control signal	(— do. —)

●全てのキャパシターは特に指定がない限りμF表示です。
●全ての抵抗は特に指定がない限り1/4Wです。
●全てのスイッチ、ボタン類はOFFポジションを示しています。
●図中のK印はセラミックキャパシター1000PFを示しています。

- All Capacitors are in μF unless otherwise specified.
- All Resistors are 1/4 watts unless otherwise specified.
- All Keyswitches, Tabswitches and push button switches show "OFF" position.
- "K" marked in Figs indicates 1000PF Ceramic Capacitors.

2, 基板図の見方 CIRCUIT BOARD

＊断りのない場合は部品側からの表記です。
The pattern shows the view from the side parts mounted unless otherwise specified.

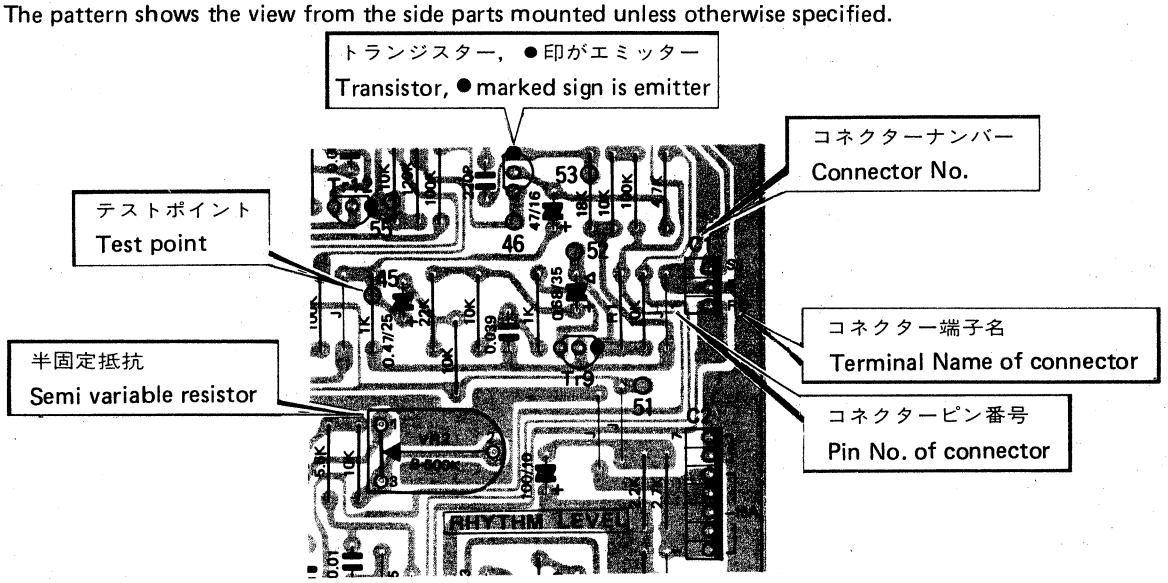

コネクターの接続はコネクター表にて表示しております。
Show the connection table about the connection.

DMシート(ユニット)のコネクタナンバー
Connector No. of DM circuit board (unit)

DM-C1

No.	Pin Name	Wire Color	Destination
1	$\overline{AIC}$	GY	PU-$\overline{AIC}$ (C3-8)
2	VE	YE	PN1-VE (C6-3)
3	VI	WH	PN1-VI (C6-4)

DM-C2

No.	Pin Name	Wire Color	Destination
1	VSS	BL 12	PU-E (C3-2)
2	VSS	BL 12	PU-3 (C3-3)
3	VSS	GR 12	PN1-EC2 (C5-1)
4	VSS	BL 12	PN1-VSS (C4-7)
5	VSS	BL 12	PN3-VSS (C3-3)
6	VSS	BL 12	EXP VSS (C1-3)
7	VSS	--	-
8	-15D	RE 12	PU--15 (C3-5)
9	-15D	RE 12	PN4--15 (C1-6)
10	-15D	RE 12	EXP-LA (C1-5)

行先ユニット名
Connected unit name
行先端子名
Connected terminal name
行先コネクターナンバー及ピン番号
Connected connector and pin No.

SPECIFICATIONS(総合仕様)

	GS1	GS2
KEYBOARDS	88 keys A_{-1} ~ C_7 (7 1/3 octaves)	73 keys E_0 ~ E_6 (6 octaves)
TONE GENERATOR	Frequency Modulation System 4 Carry 4 Modulation 8 EG	Frequency Modulation System 2 Carry 2 Modulation 4 EG
Maximum number of notes	16 notes	16 notes
CONTROL PANEL		
DITUNING	RANDOM 2 RANDOM 1 OFF 0 STATIC 1 STATIC 2	OFF 0 STATIC 1 STATIC 2
TREMOLO	TREMOLO SPEED (1 ~ 6Hz) TREMOLO DEPTH	TREMOLO SPEED (0.8 ~ 10Hz) TREMOLO DEPTH
VIBRATO	VIBRATO SPEED (4 ~ 10Hz) VIBRATO DEPTH	VIBRATO SPEED (4 ~ 10Hz) VIBRATO DEPTH
TREMOLO Switch	ON – OFF	ON – OFF
ENSEMBLE Switch	ON – OFF	ON – OFF
TOUCH RESPONSE Switch	ON – OFF	
TONE SELECTORS	1, 2, 3, 4, ~ 16	1, 2, 3, 4, ~ 16
IQUALIZER	BASS ±12dB at 100Hz MID-RANGE ±12dB at 600Hz TREBLE ±10dB at 6KHz	BASS ±12dB at 100Hz MID-RANGE ±12dB at 600Hz TREBLE ±10dB at 6KHz
MASTER VOLUME	(Control Panel)	(Control Panel)
CARD READER	2 Pass/Tone	1 Pass/Tone
STORE Switch	(Bottom Panel)	(Control Panel)
OTHER PANELS		
MASTER PITCH	+35 Cent ~ –25 Cent (Bottom Panel)	+35 Cent ~ –25 Cent (Control Panel)
HEADPHONES Jack	8Ω Mixed OUT (Bottom Panel)	8Ω Mixed OUT (Front Rail)
FOOT CONTROL Jack	For EXP. Pedal (Bottom Panel)	For EXP. Pedal (Rear Panel)
PGM. LOCK Switch	IN – OUT (Bottom Panel)	LOCK – UNLOCK (Rear Panel)
LINE Switch	ON – OFF (Bottom Panel)	ON – OFF (Front Rail)
PROGRAMMER Connector	24P (Bottom Panel)	24P (Rear Panel)
BATTERY (Memory back-up)	UM3 x 2 (Bottom Panel)	UM3 x 2 (Bottom Panel)
PEDAL CONTROLS		
DAMPER Pedal	ON – OFF	ON – OFF
TREMOLO Pedal	ON – OFF	ON – OFF
VIBRATO Pedal	ON – OFF	ON – OFF

	GS1	GS2
OUTPUT		
OUTPUT Jack (0dB)	CH1, CH2, MIXED (Pedal Unit)	CH1, CH2, MIXED (Rear Panel)
Balanced OUTPUT (–20dB)	CH1, CH2 (Pedal Unit)	CH1, CH2 (Rear Panel)
POWER CONSUMPTION		
INPUT	AC100V, 120V, 220V, 240V 95W	AC100V, 120V, 220V, 240V 40W
DIMENSIONS		
Width	1,500 mm (59")	1,283 mm (50-1/2")
Depth	832 mm (32-3/4")	641 mm (25-1/4")
Height	826 mm (32-1/2")	823.5 mm (32-1/2")
Weight	90 kg (198.4 lbs)	72 kg (158.7 lbs)

GS1 UNIT LAYOUT

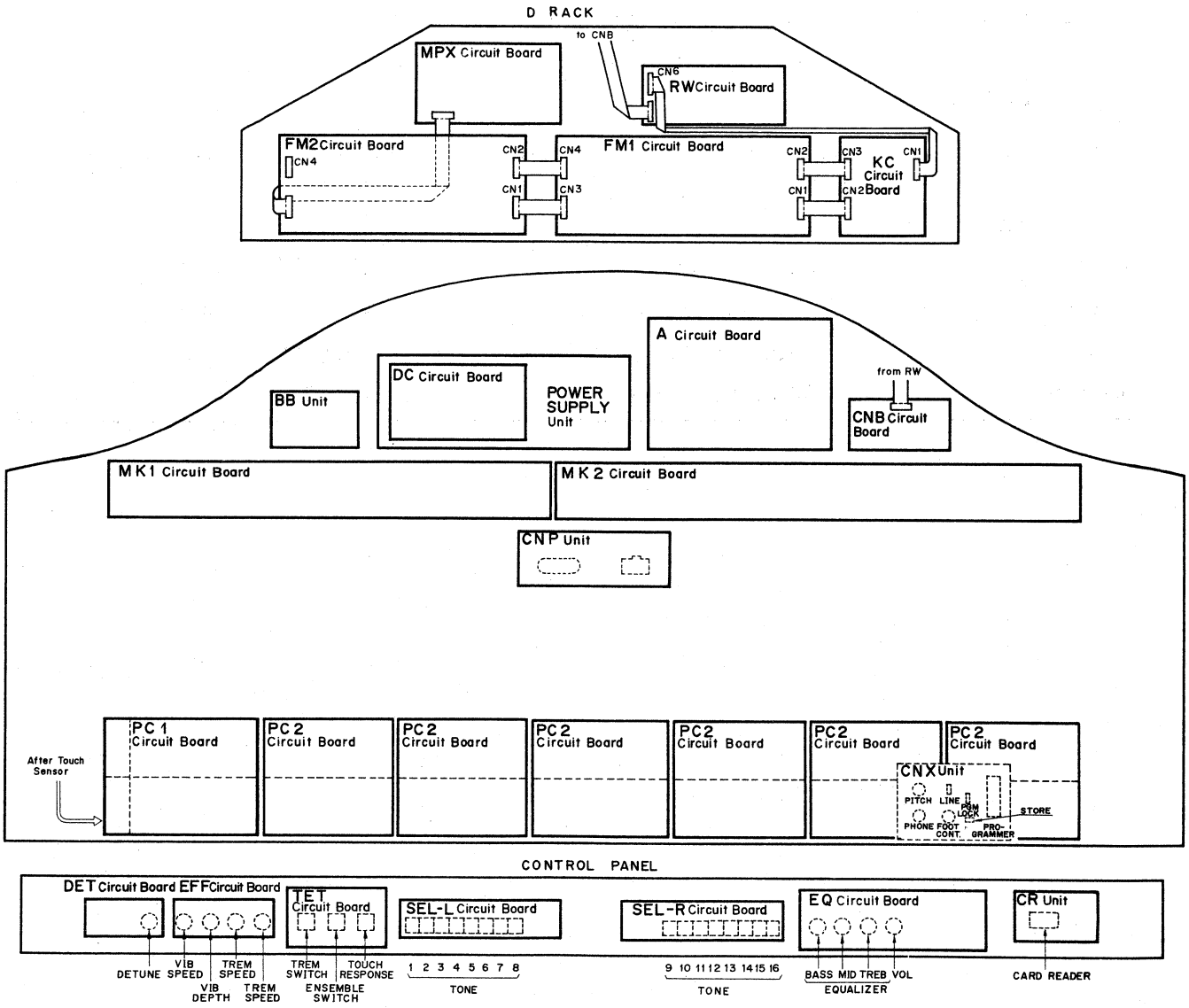

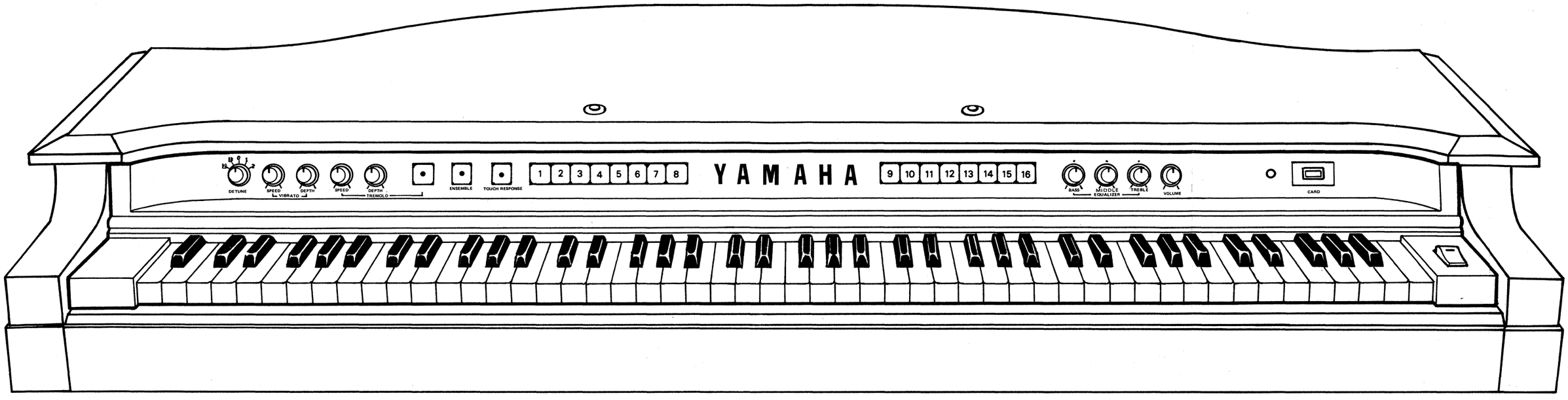

PEDAL Unit Back Panel

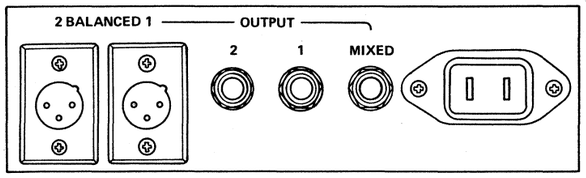

PEDAL Unit

Front View

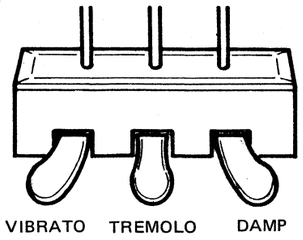

CNX Unit Panel

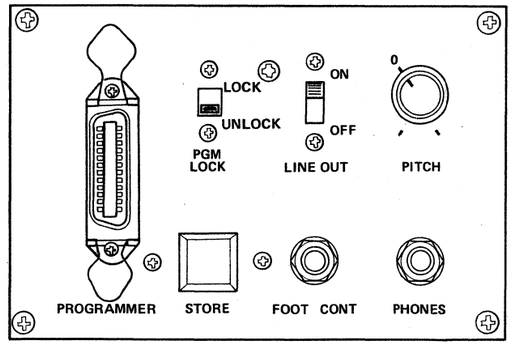

GS1 PANEL LAYOUT

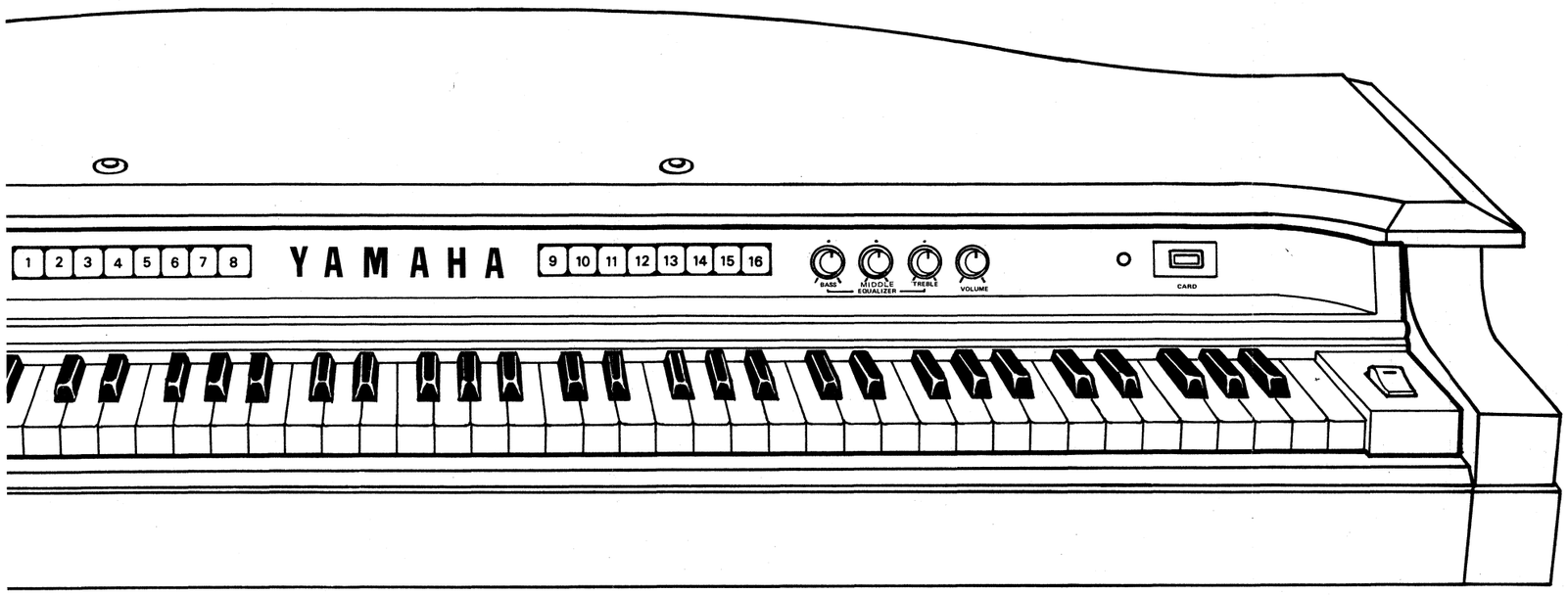

PEDAL Unit

Front View

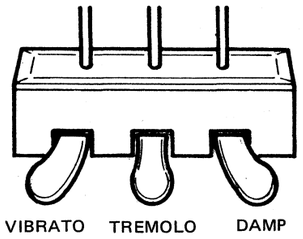

CNX Unit Panel

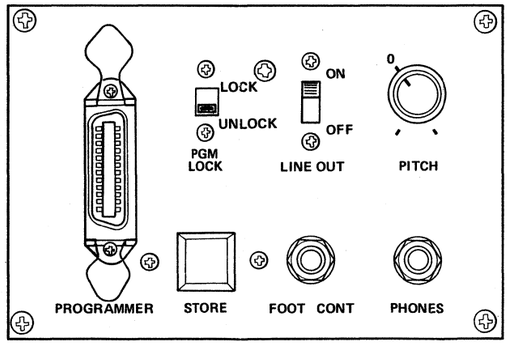

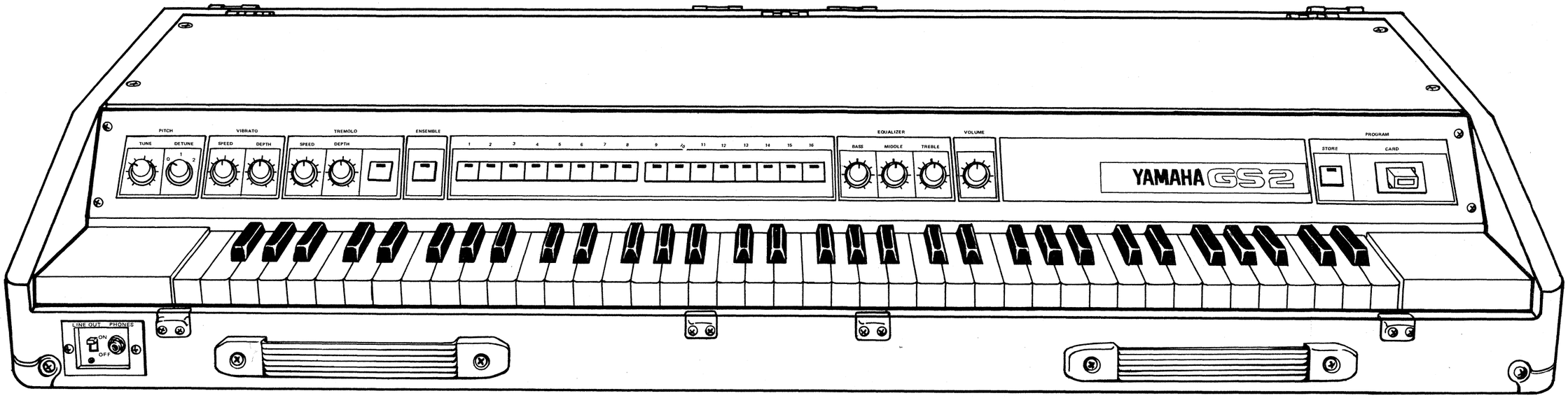

I/O Unit (Rear Panel)

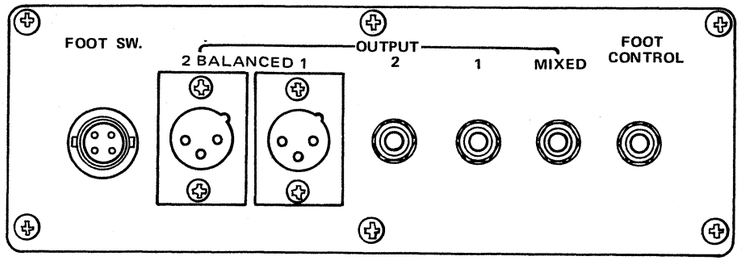

PGM Unit (Rear Panel)

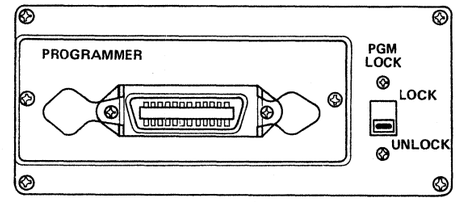

AC Circuit Board (Side Panel)

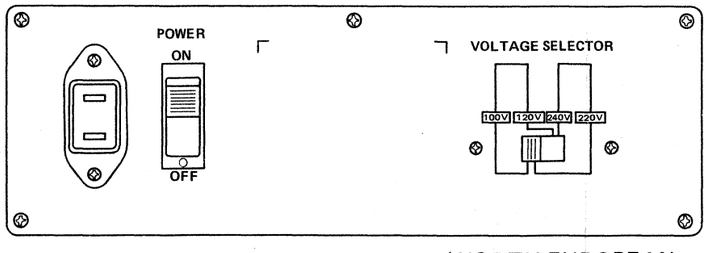

(NORTH EUROPEAN
GENERAL EXPORT)

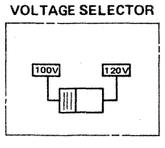

(U.S.A.
CANADIAN
JAPAN)

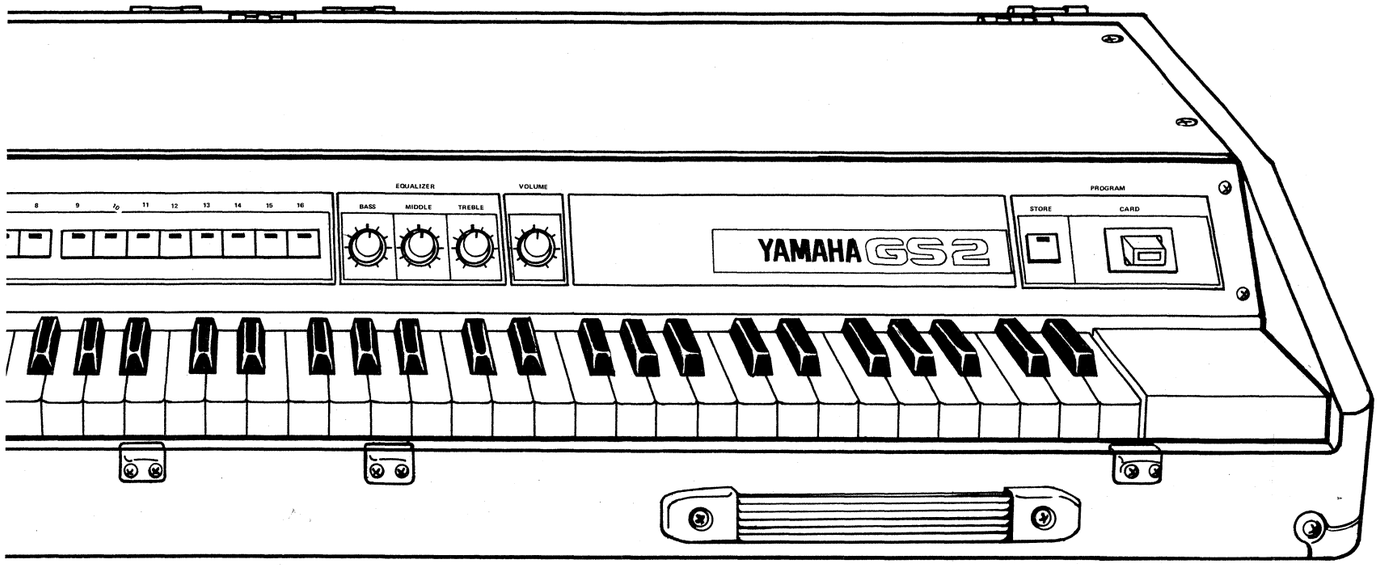

PGM Unit (Rear Panel)

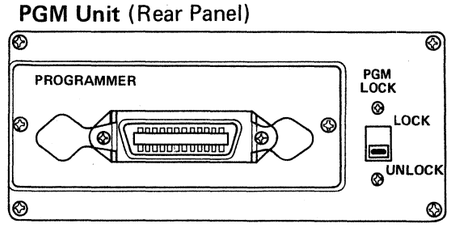

AC Circuit Board (Side Panel)

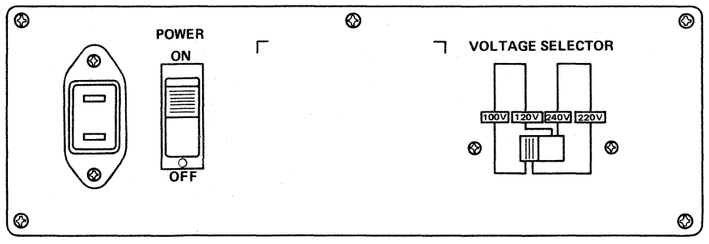

(NORTH EUROPEAN GENERAL EXPORT)

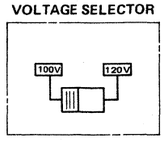

(U.S.A. CANADIAN JAPAN)

GS2 PANEL LAYOUT • UNIT LAYOUT

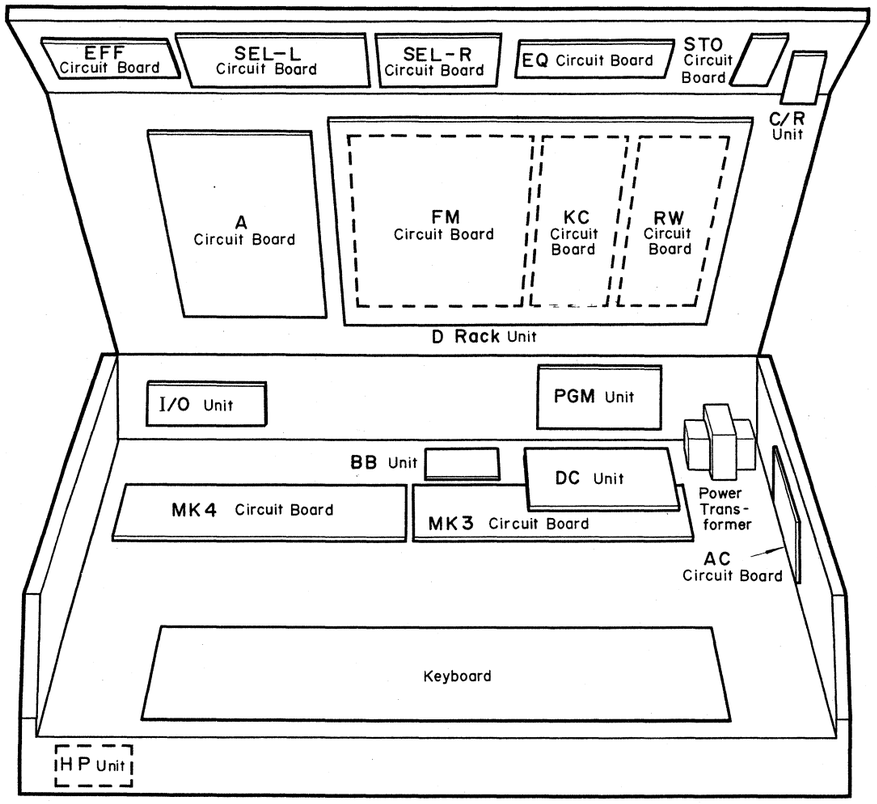

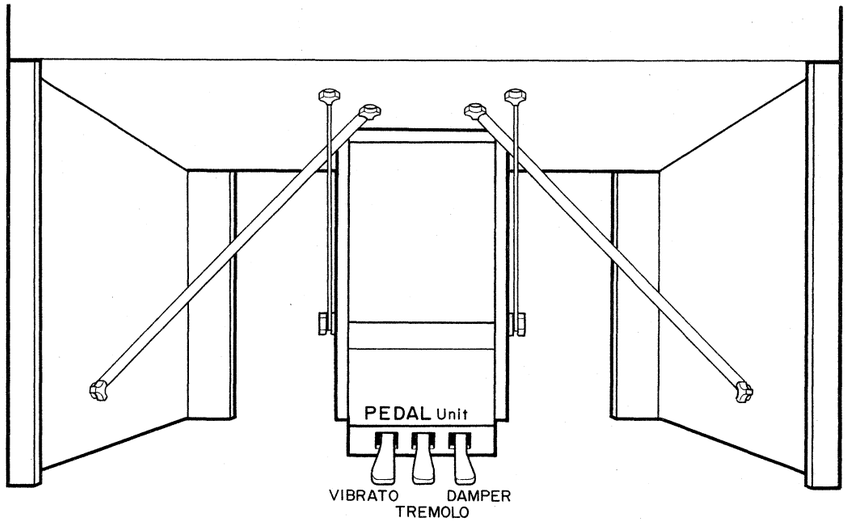

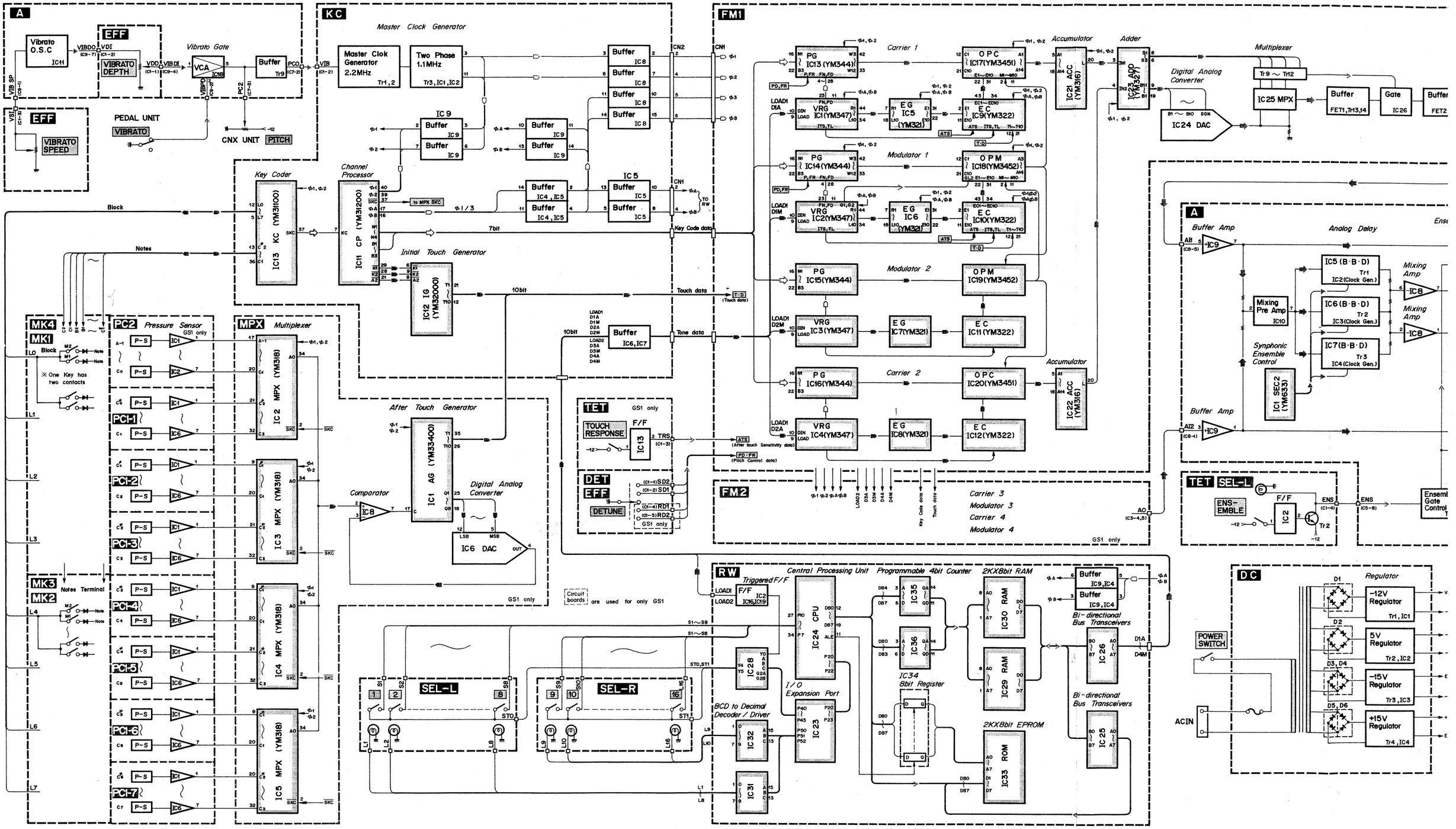
A
Vibrato O.S.C
IC11
EFF
VIBRATO DEPTH
Vibrato Gate
VCA
IC18
Buffer
Tr9
EFF
VIBRATO SPEED
PEDAL UNIT
VIBRATO
CNX UNIT
PITCH
KC
Master Clock Generator
Master Clok Generator 2.2MHz
Tr1,2
Two Phase 1.1MHz
Tr3,IC1,IC2
IC9
Buffer
IC8
IC5
Key Coder
IC13 KC (YM3100)
Channel Processor
IC11 CP (YM31200)
to MPX SKC
Initial Touch Generator
IC12 IG (YM32000)
Block
Notes
7bit
10bit
Key Code data
Touch data
Tone data
Buffer
IC6,IC7
MK4
MK1
Block
※ One Key has two contacts
PC2
Pressure Sensor
GS1 only
PC1-1
PC1-2
PC1-3
PC1-4
PC1-5
PC1-6
PC1-7
MPX
Multiplexer
IC2 MPX (YM318)
IC3 MPX (YM318)
IC4 MPX (YM318)
IC5 MPX (YM318)
After Touch Generator
IC1 AG (YM33400)
Comparator
IC8
Digital Analog Converter
IC6 DAC
GS1 only
MK3
MK2
Notes Terminal
TET
GS1 only
TOUCH RESPONSE
F/F
IC13
DET
EFF
DETUNE
GS1 only
Circuit boards are used for only GS1
SEL-L
SEL-R
FM1
Carrier 1
Modulator 1
Modulator 2
Carrier 2
PG
IC13 (YM344)
OPC
IC17(YM3451)
VRG
IC1(YM347)
EG
IC5 (YM321)
EC
IC9(YM322)
IC14(YM344)
OPM
IC18(YM3452)
IC2(YM347)
IC6 (YM321)
IC10(YM322)
IC15(YM344)
IC19(YM3452)
IC3(YM347)
IC7(YM321)
IC11(YM322)
IC16(YM344)
IC20(YM3451)
IC4(YM347)
IC8(YM321)
IC12(YM322)
Accumulator
IC21 ACC (YM316)
IC22 ACC (YM316)
Adder
IC23 ADD (YM327)
Digital Analog Converter
IC24 DAC
Multiplexer
IC25 MPX
Buffer
FET1,Tr13,14
Gate
IC26
FM2
Carrier 3
Modulator 3
Carrier 4
Modulator 4
GS1 only
A
Buffer Amp
Analog Delay
IC5 (B·B·D)
IC6 (B·B·D)
IC7 (B·B·D)
Mixing Amp
Mixing Pre Amp
IC10
Synphonic Ensemble Control
IC1 SEC2 (YM633)
TET
SEL-L
ENS-EMBLE
IC2
Tr2
RW
Triggered F/F
Central Processing Unit
IC24 CPU
Programmable 4bit Counter
IC35
IC36
IC34 8bit Register
2KX8bit RAM
IC30 RAM
IC29 RAM
2KX8bit EPROM
IC33 ROM
Bi-directional Bus Transceivers
IC26
IC25
I/O Expansion Port
IC23
BCD to Decimal Decoder / Driver
IC28
IC32
IC31
DC
Regulator
-12V Regulator
5V Regulator
-15V Regulator
+15V Regulator
POWER SWITCH
ACIN

GS1/GS2 Block Diagram

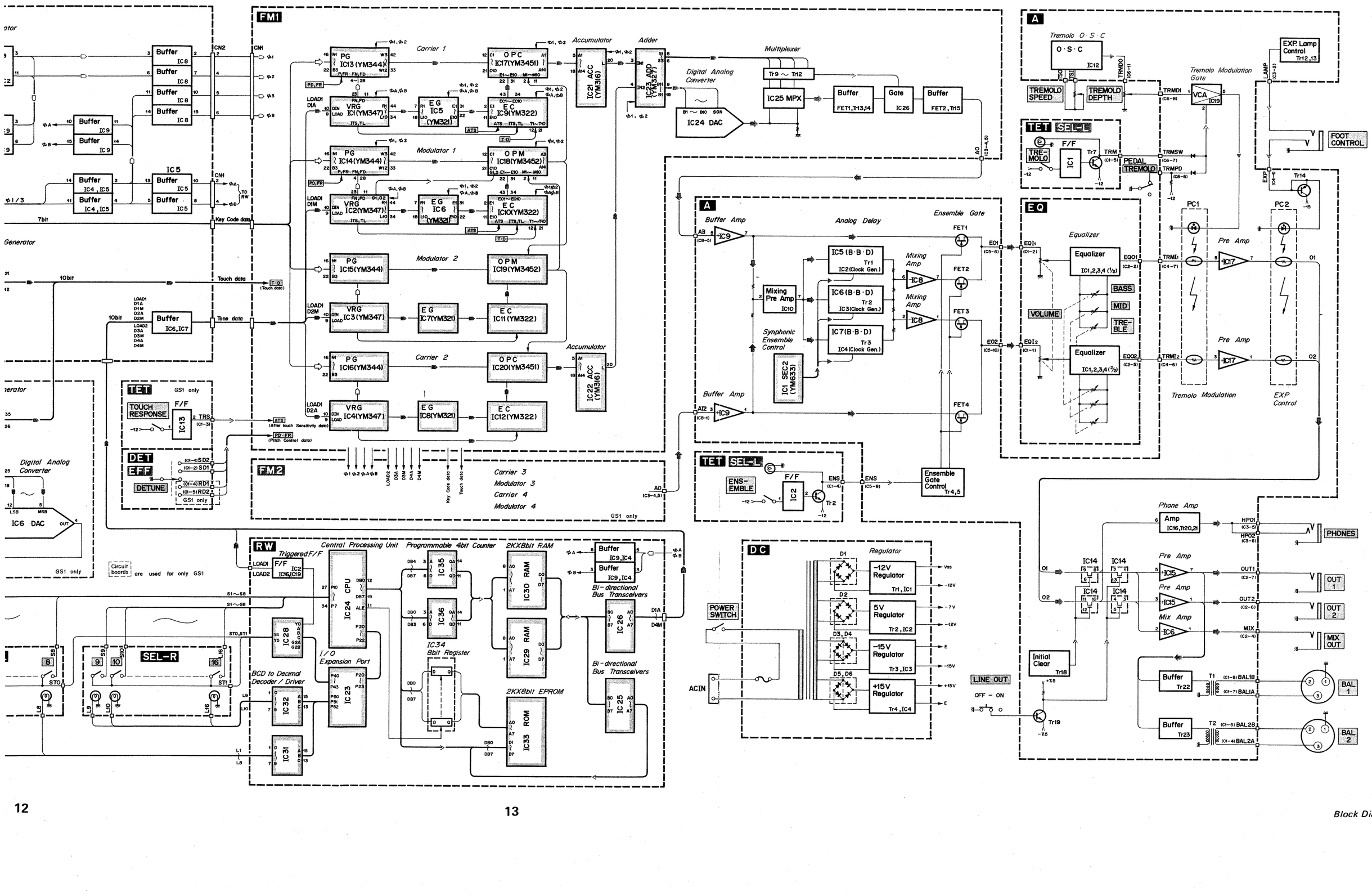

GS1 ASSEMBLY PROCEDURE(組立手順)

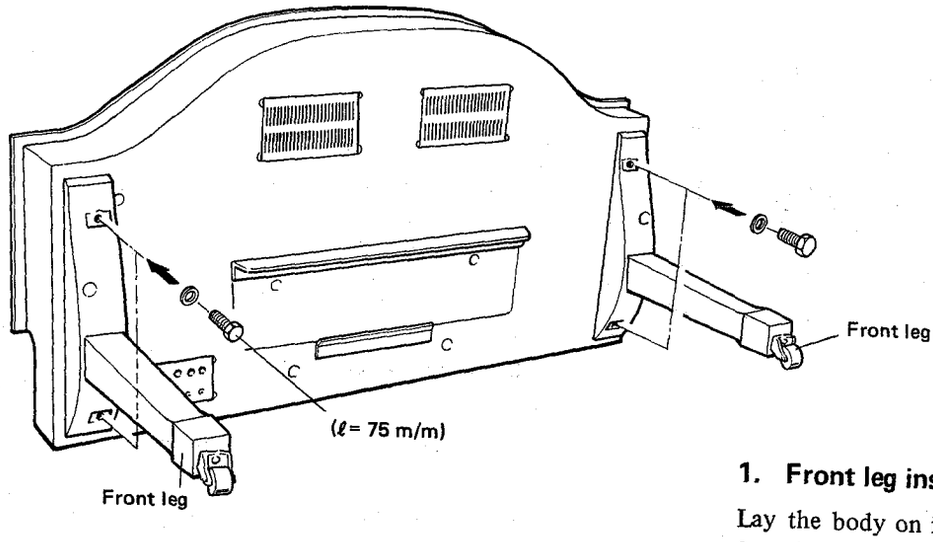

1. Front leg installation

Lay the body on its back as illustrated and fix the front legs with bolts and washers.

1．前脚の取り付け

本体を図のように横にして，前脚をボルトとワッシャで固定します。

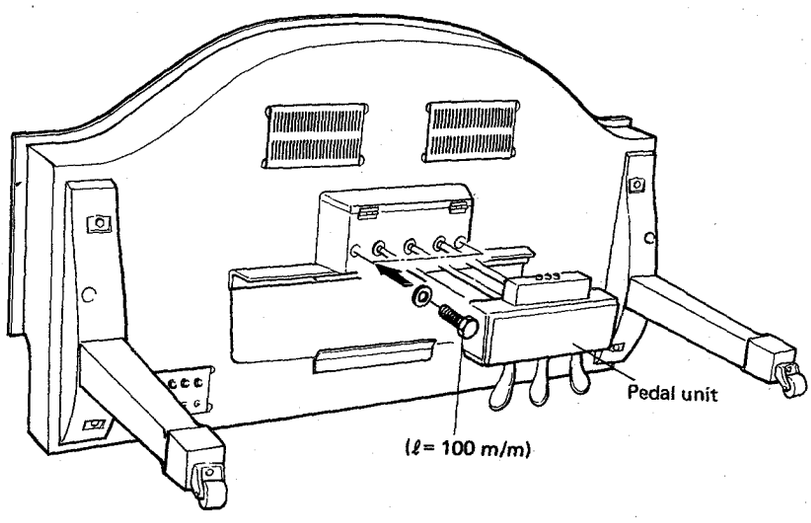

2. Pedal unit installation

Next, fix the pedal unit with bolts and washers.

2．ペダルユニットの取り付け

次に，ペダルユニットをボルトとワッシャで固定して下さい。

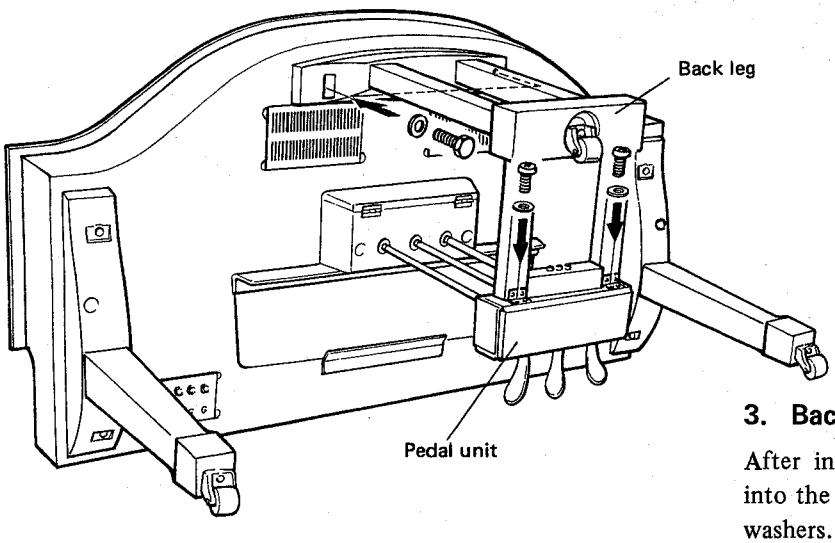

3. Back leg installation

After inserting the bottom beams of the back leg into the pedal unit, fix the back leg with bolts and washers.
Then fasten the back leg beams onto the pedal unit with screws and washers.

3．後脚の取り付け

後脚の横柱をペダルユニットに差し込んだ後，後脚をボルトとワッシャで固定します。その後，後脚の横柱とペダルユニットをネジとワッシャで連結して下さい。

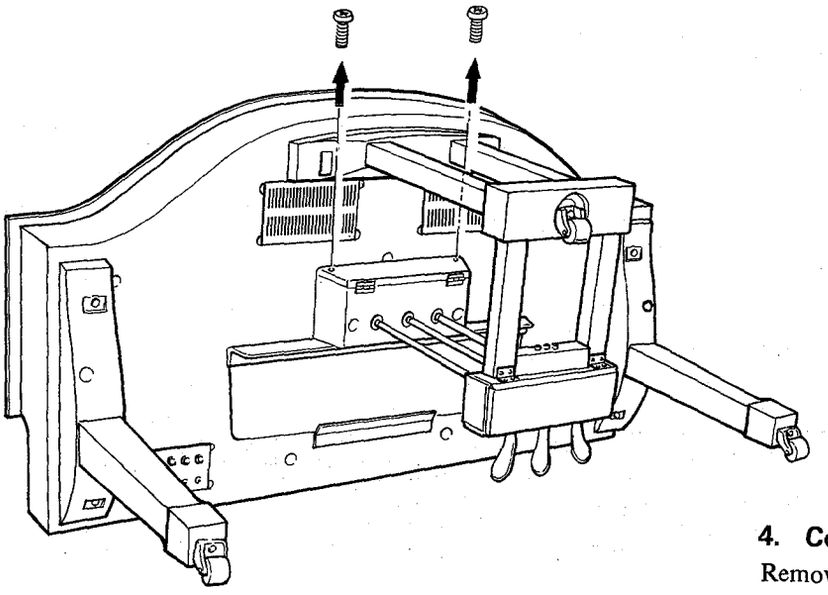

4. Connectors installations

Remove the screws of the pedal unit. Connect the two connectors inside the unit. Then replace the screws tightly.

Connect the pedal cable to the FOOT SW connector as illustrated.

4．コネクタの取り付け

ペダルユニットのネジを外し内部のコネクタ２個を連結し，再びネジを固定します。

ペダル箱よりペダルケーブルを取り出し，図の様にFOOT SW内コネクタへ取り付けます。

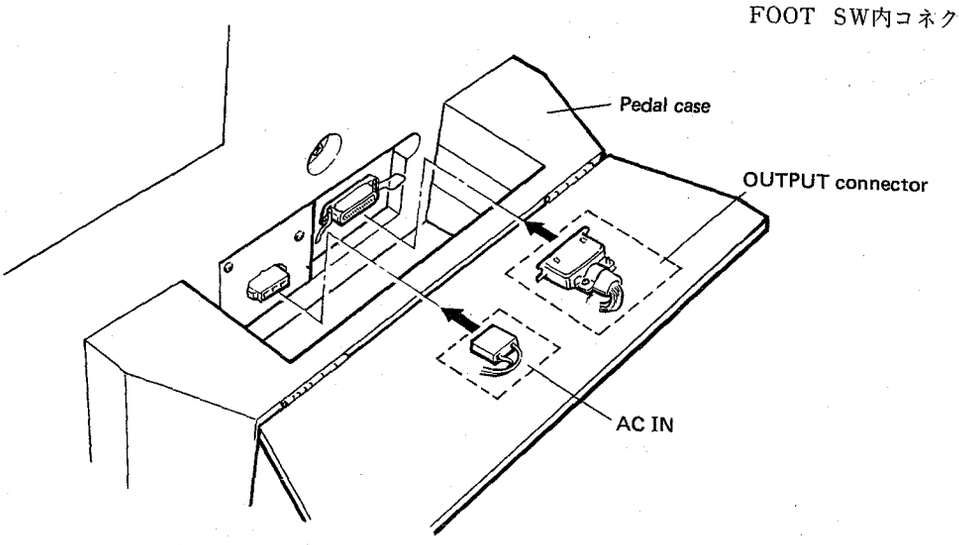

GS1 DISASSEMBLY PROCEDURE(分解手順)

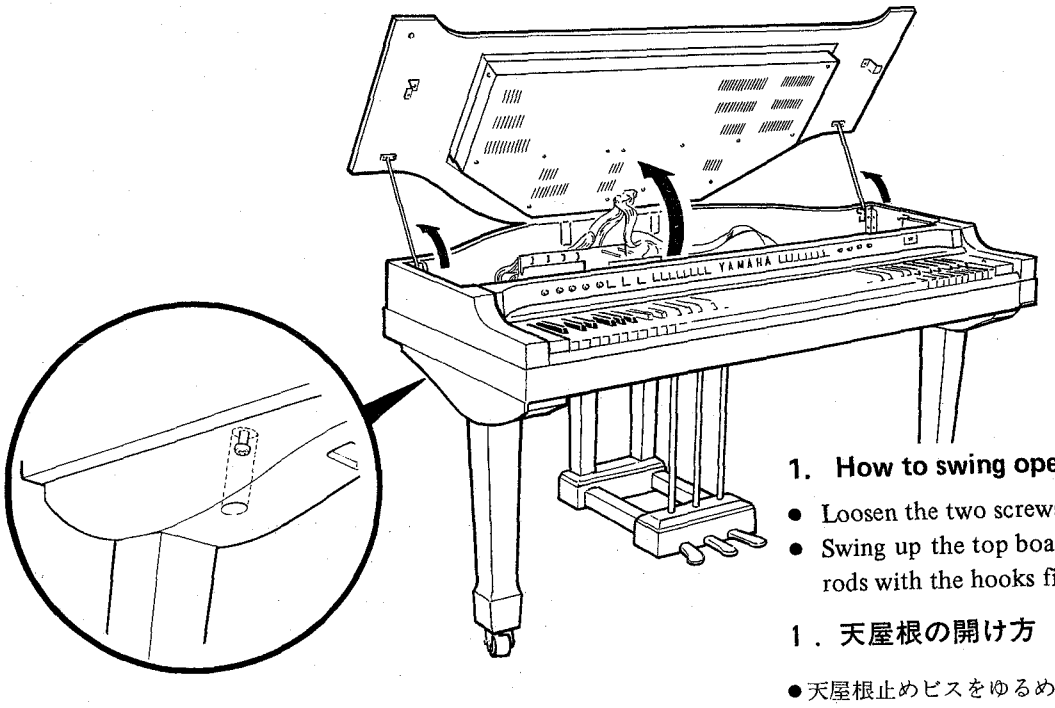

1. How to swing open the top board

- Loosen the two screws fixing the top board.
- Swing up the top board and catch the supporting rods with the hooks fitted on the top board.

1．天屋根の開け方

- 天屋根止めビスをゆるめます。(2ヶ所)
- 天屋根を開き，ささえ金具を天屋根のフックに引かけて下さい。

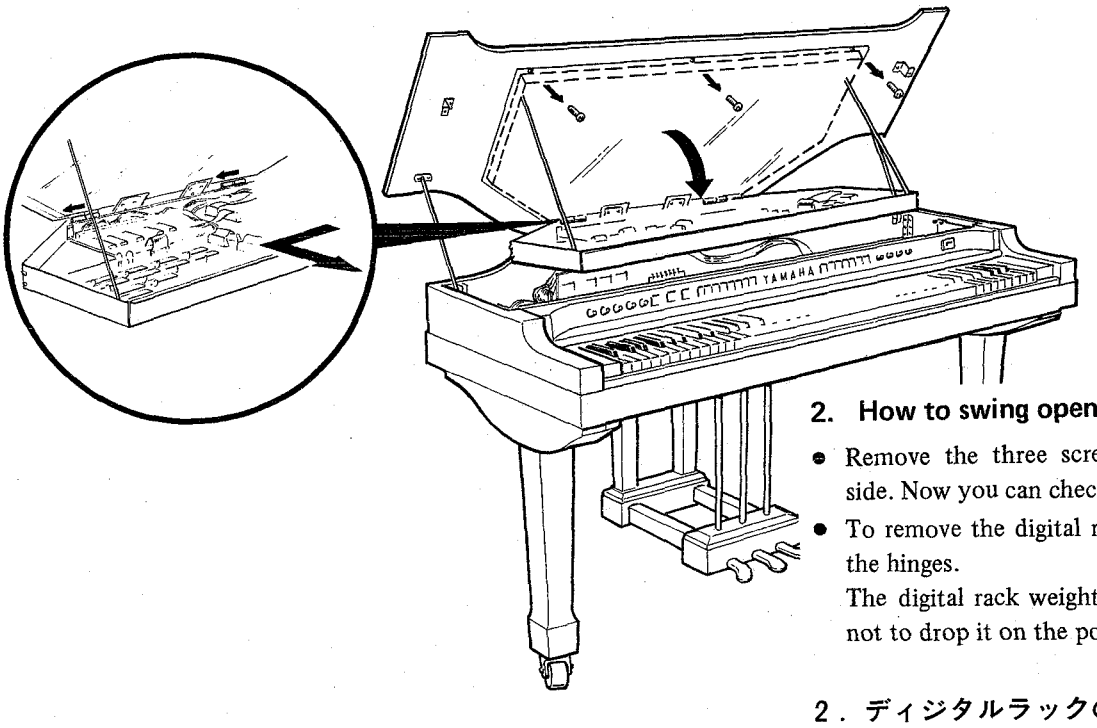

2. How to swing open the digital rack

- Remove the three screws located on the front side. Now you can check it.
- To remove the digital rack, slide it to the left at the hinges.
  The digital rack weights considerably. Take care not to drop it on the power supply unit.

2．ディジタルラックの開け方

- 手前側3本のネジを外せば，ディジタルラックは，前方に開き，チェック出来る状態になります。
- ディジタルラックは，蝶番の所を左にずらせば外すことが出来ます。
  この場合，ディジタルラックはかなり重いので，電源ユニットの上へ落とさない様注意して下さい。

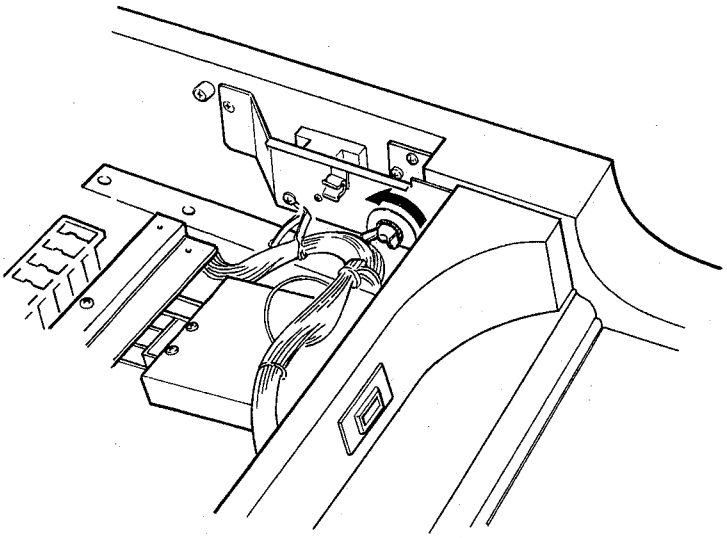

3. How to erect the control panel

Loosen the wing bolts located on the left and right sides as illustrated and erect the control panel.

3．コントロールパネルの起こし方

図の様に左右2ヶ所にある蝶ボルトをゆるめて，コントロールパネルを起こします。

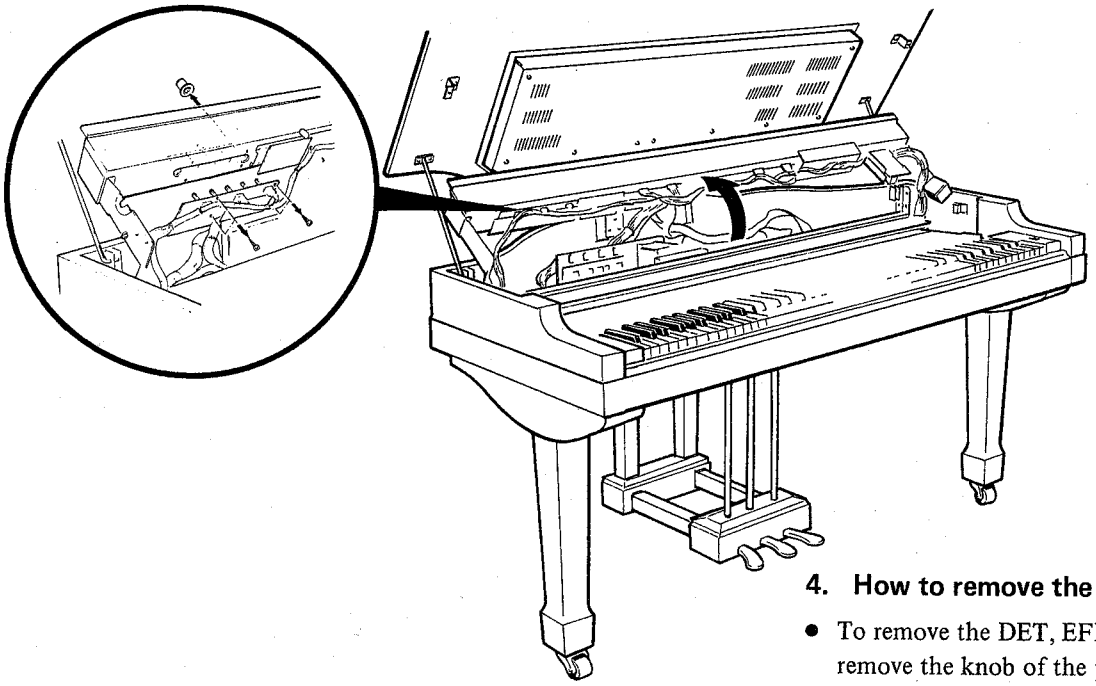

4. How to remove the panel circuit board

- To remove the DET, EFF, and EQ circuit boards, remove the knob of the panel first.
- Loosen the screws of the panel circuit board when the control panel is erected as illustrated. Then remove the circuit board.

4．パネルシートの外し方

- DET，EFF，EQシートを外す場合は，あらかじめパネルのつまみを外しておきます。
- 図の様にコントロールパネルを起こした状態で，パネルシートのビスをゆるめて，シートを外します。

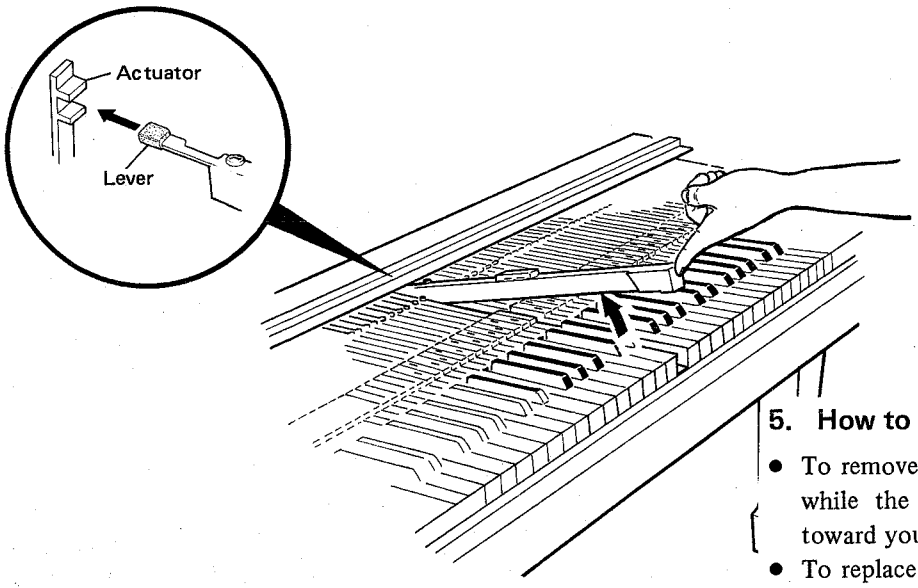

5. How to remove a key

- To remove a key, lift it on the end nearer to you while the control panel is erected and pull it toward you.
- To replace the key, fit the lever to the depression of the actuator.

5．鍵盤の外し方

●コントロールパネルを起こした状態で図の様に鍵盤の手前側を持ち上げて，手前に引き出せば鍵盤を外すことが出来ます。

●鍵盤をもとにもどす時には，レバーがアクチェーターの凹部に入るように位置を合わせて下さい。

6. How to remove the PC circuit board

- The PC circuit board is located under the keyboard. Remove the keys located over the PC circuit board to be removed.
- Remove the dust cover.
- Remove the eight screws fixing the PC circuit board.
- Remove the circuit board from two holders by squeezing them with pliers.

6．PCシートの外し方

●PCシートは，鍵盤の下にあります。外そうとするPCシート上の鍵盤を取り外して下さい。

●防塵カバーを外して下さい。

●PCシートを止めているビスを外します。(8本)

●ホルダーで固定してある箇所(2ヶ所)は，ラジオペンチではさんでから外すようにします。

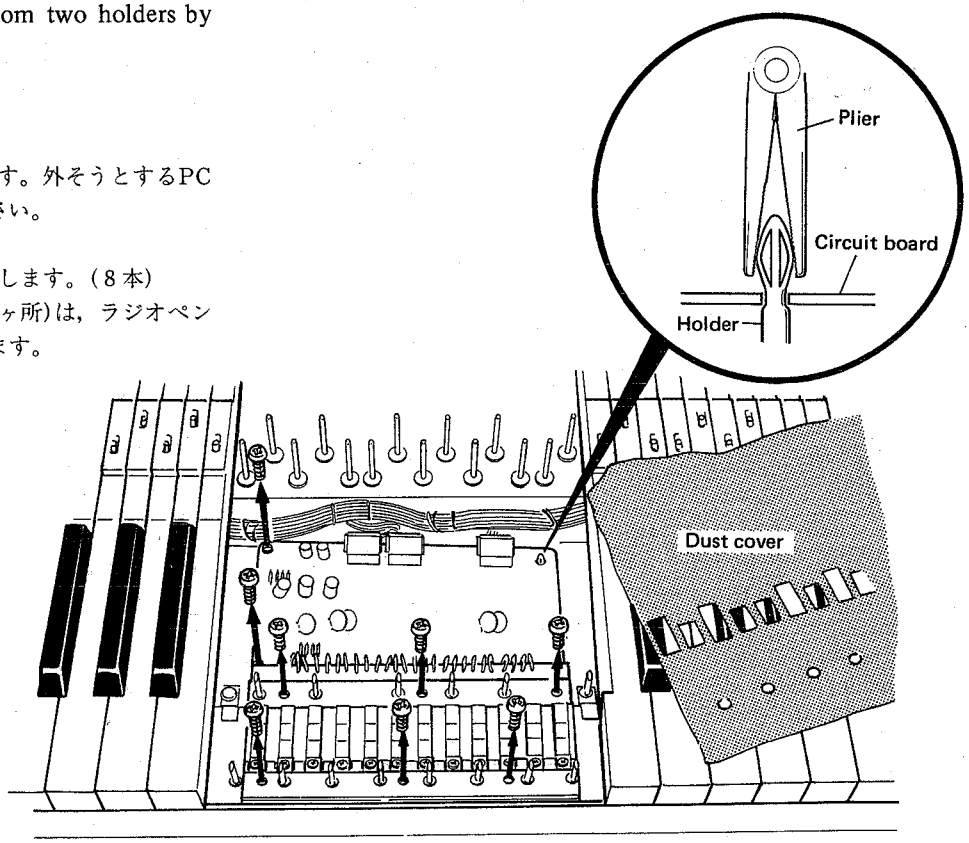

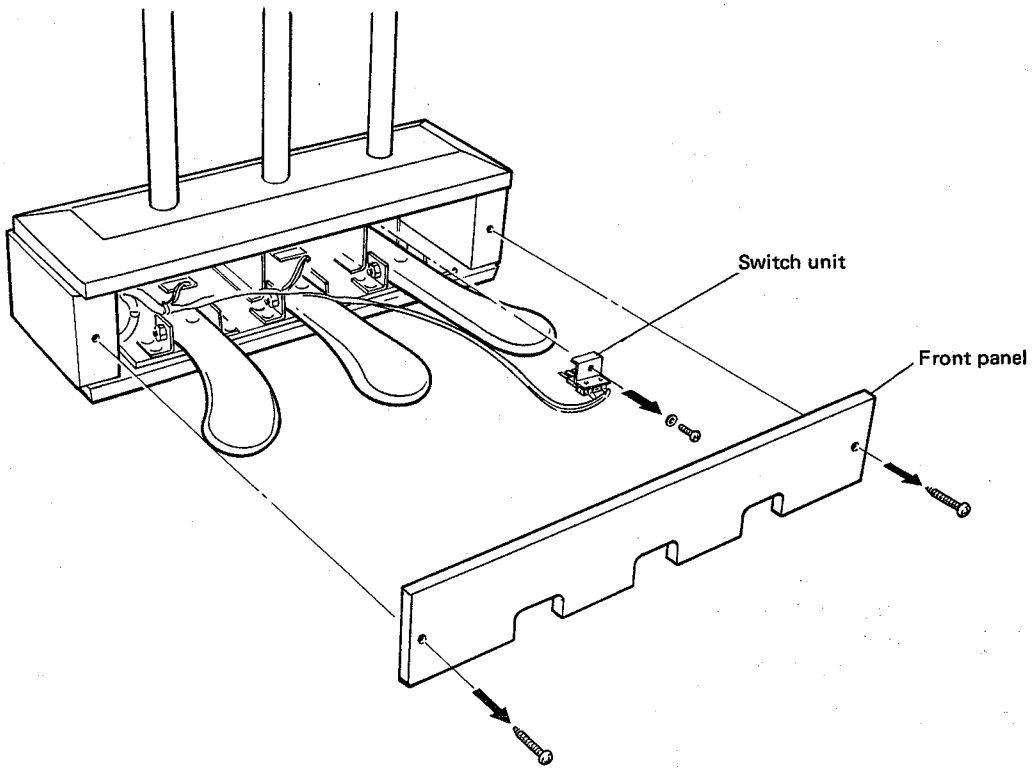

7. How to remove a pedal switch

- Remove the front panel of the pedal unit.
- Loosen the screw accessible from the front side and the switch unit can be removed.

7．ペダルスイッチの外し方

- ペダルユニットの前面パネルを外します。
- スイッチユニットは前面からビスをゆるめれば外すことが出来ます。

GS2 ASSEMBLY PROCEDURE(組立手順)

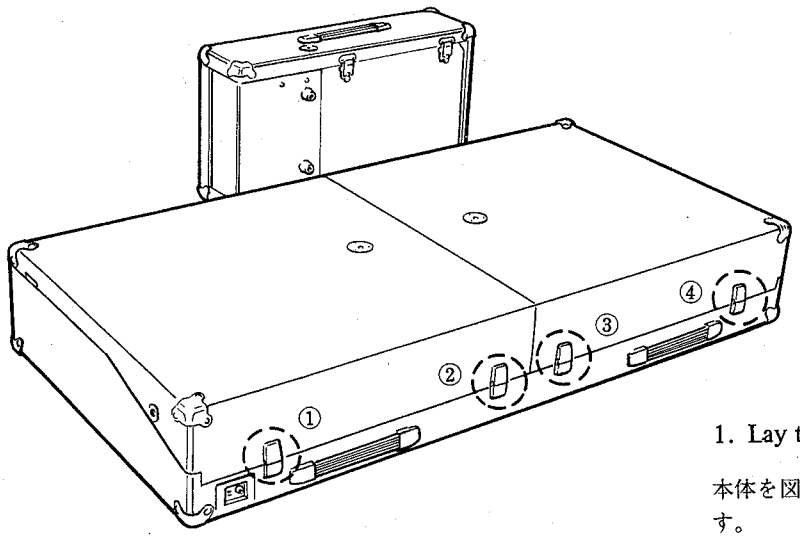

1. Lay the case as illustrated. Release locks ①~④ .

本体を図のように置き，①~④のパッチン錠をはずします。

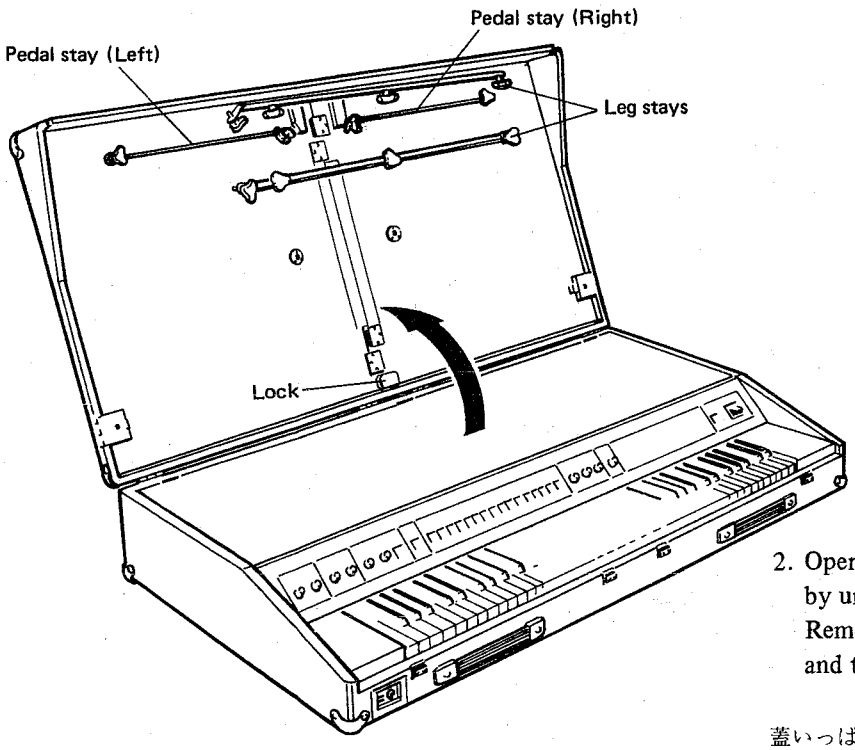

2. Opening the lid fully, remove it from the bottom by uncoupling the two rear hinges.
Remove the eight knob screws, the leg stays, and the pedal stays.

蓋いっぱいに開き，後側の2個のヒンジより蓋をはずします。
蓋内部に取り付けられている脚柱，ペダルステーを，8個のノブネジをはずし取り出します。

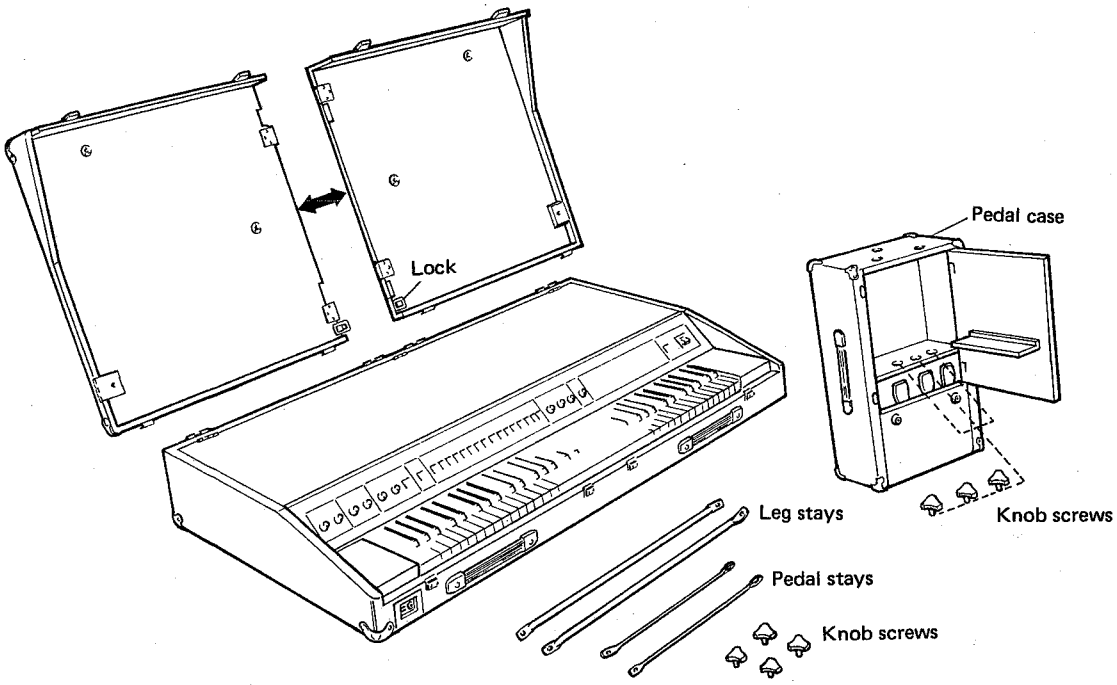

蓋内部のパッチン錠をはずして蓋を2つに分け，本体の脚にします。

3. Release the lock of the lid and divide it into two parts to use it as legs.

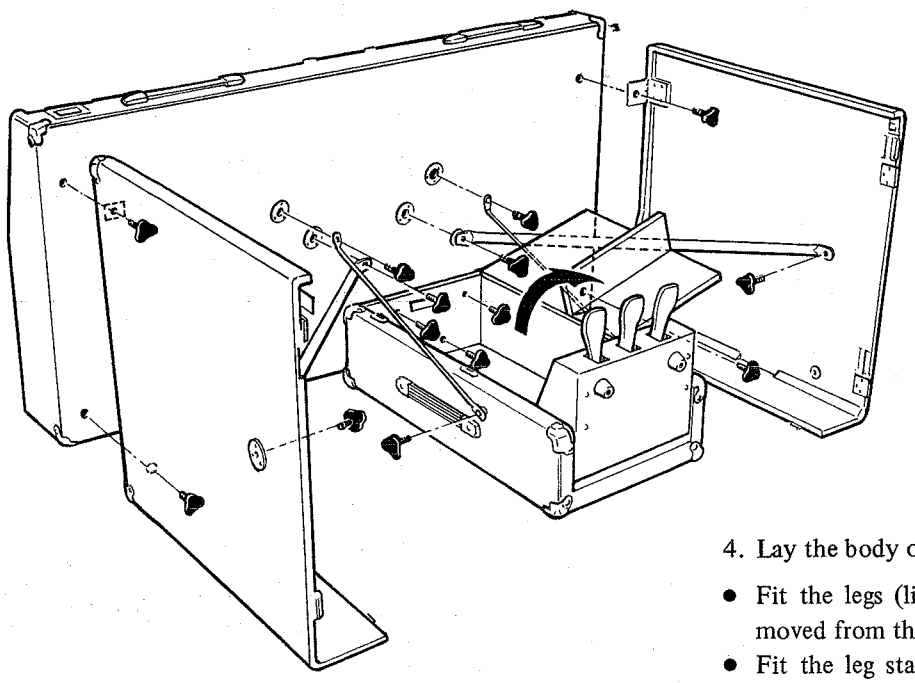

本体を図の様に，横にします。

- 蓋脚を取りつけます。(蓋内部からとりはずした4本のノブネジを使います)
- 脚柱を取りつけます。(脚柱に付いている4本のノブネジを使います)
- ペダル箱を取りつけます。(ペダル箱内の3本のノブネジを使います)
- ペダルステーの右，左を確認して取りつけます。(ペダルステーに付いている4本のノブネジを使います)

4. Lay the body on its back as illustrated.

- Fit the legs (lid) (use the four knob screws removed from the lid).
- Fit the leg stays (use the four knob screws provided for the leg stays).
- Fit the pedal case (use the three knob screws provided in the pedal case).
- Fit the pedal stays (use the four knob screws provided for the pedal stays). Note that the left and right pedal stays differ. Install each at the right place.

  Connect the pedal cable, put in the pedal case, to the foot switch connector on the rear panel.

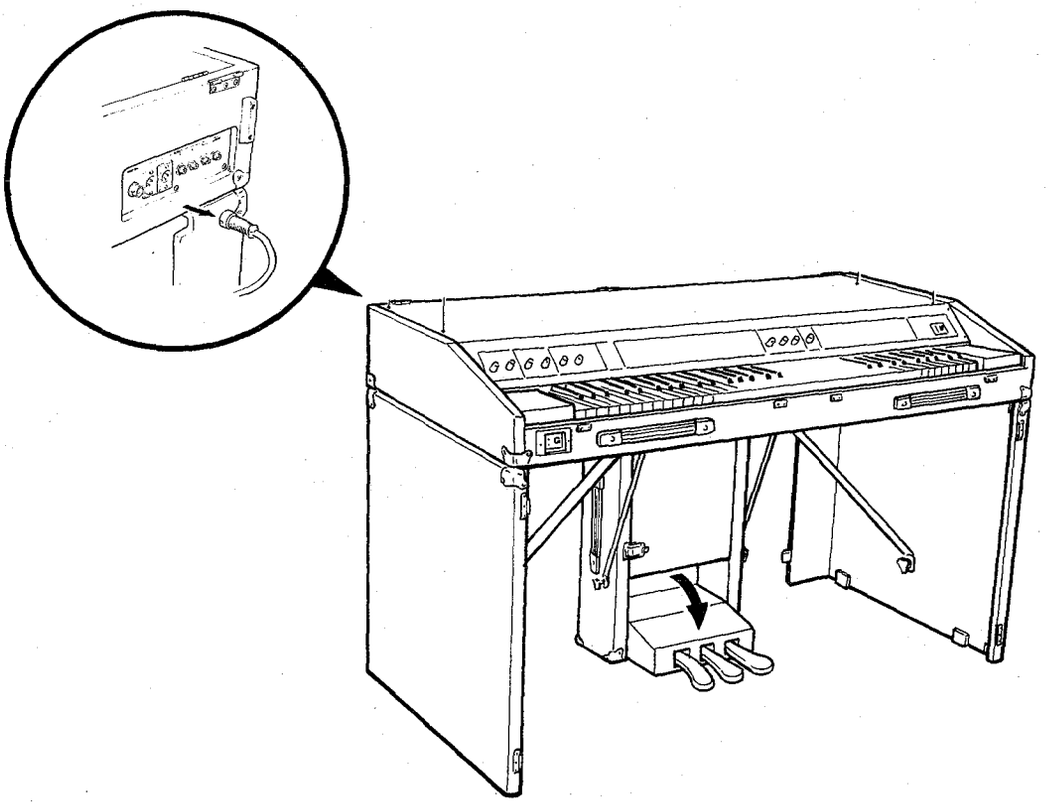

- Connect the pedal cable to the FOOT SW connector as illustrated.

- ペダル箱よりペダルケーブルを取り出しリヤパネルの FOOT SW 用コネクタへ取り付けます。

GS2 DISASSEMBLY PROCEDURE(分解手順)

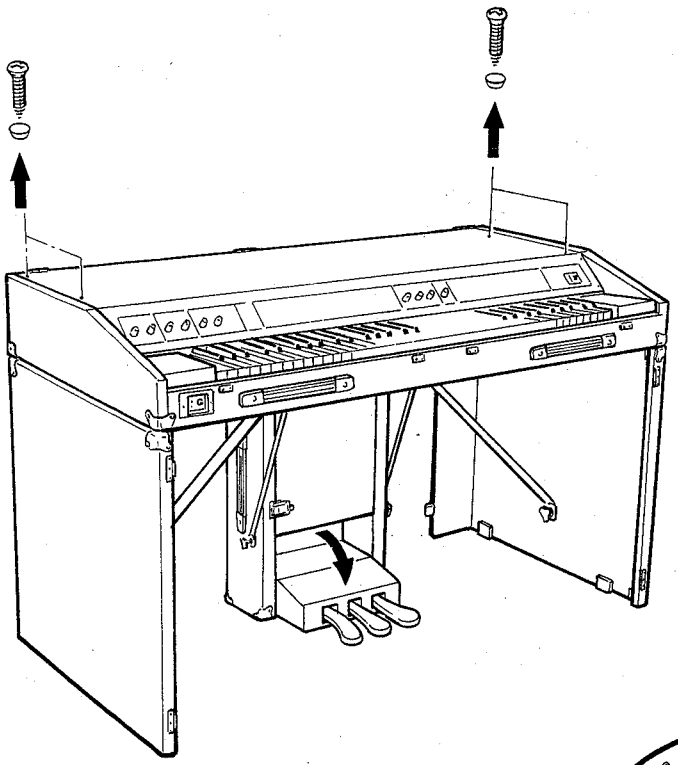

1. Opening top board

Remove the four screws fastening the top board.

1．天屋根のあけ方

天屋根止めネジ４本を取りはずします。

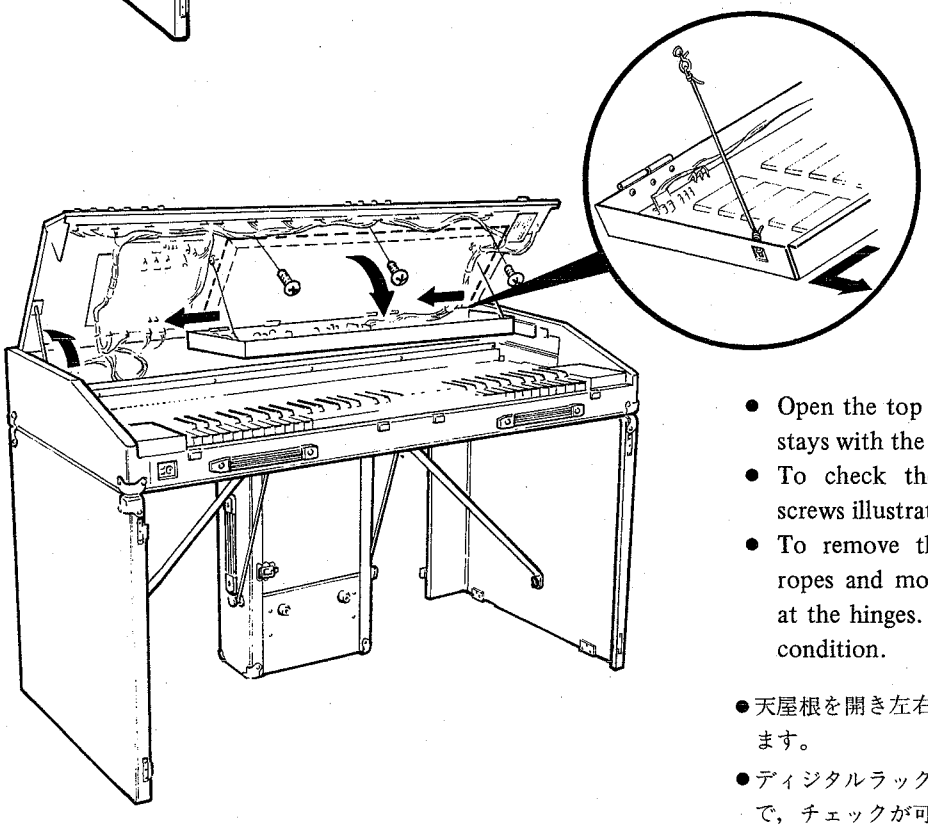

- Open the top board and catch the left and right stays with the stay hooks securely.
- To check the digital rack, remove the three screws illustrated.
- To remove the digital rack, remove the rack ropes and move it to the left so that it slips off at the hinges. You may work more easily in this condition.

- ●天屋根を開き左右の屋根ステー受け金具に確実にかけます。
- ●ディジタルラックは，図の３本の止めネジをはずす事で，チェックが可能な状態となります。
- ●ディジタルラックは，ラックロープをはずし，ディジタルラック全体を左側に押す事で蝶番部よりはずれ，より作業を楽にする事が出来ます。

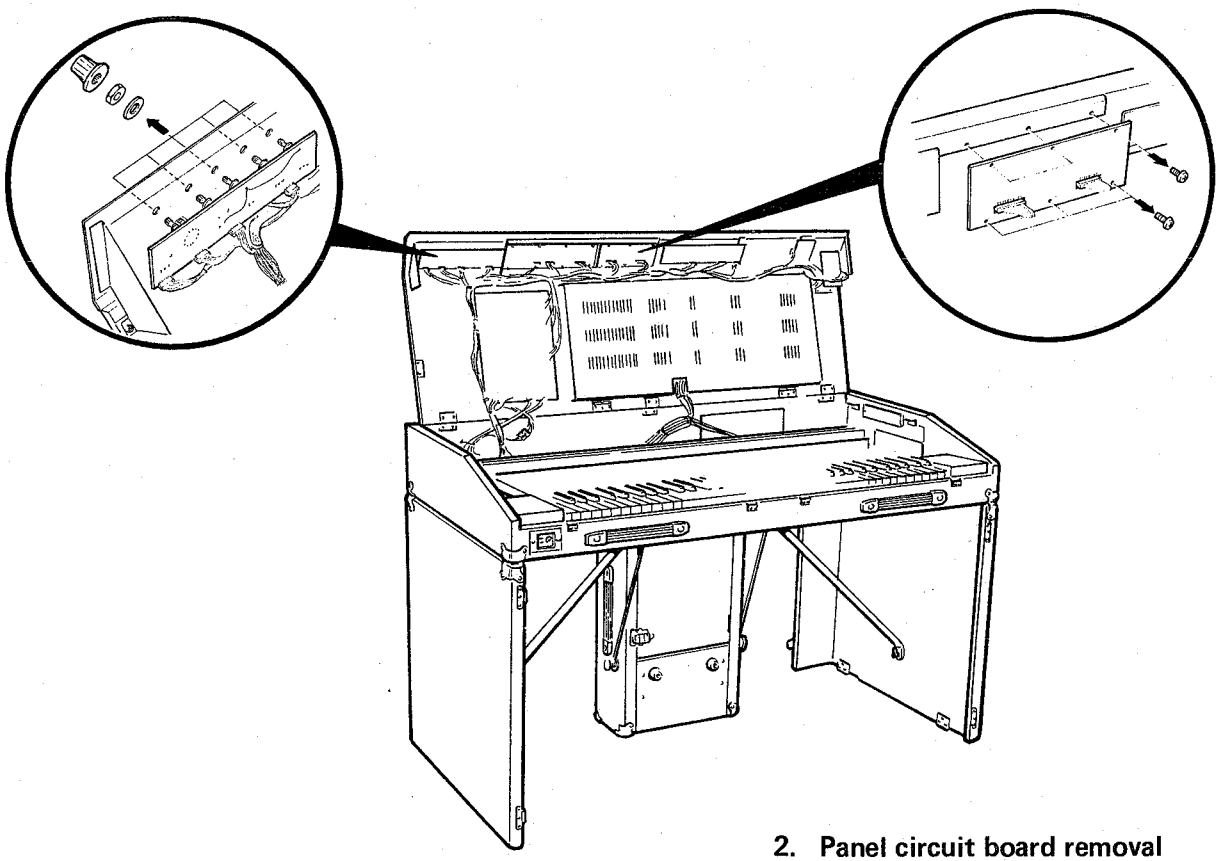

2. Panel circuit board removal

- To remove the panel circuit boards, remove the control knobs on the panel surface and hex nuts. (EFF and EQ circuit boards)
- Remove screws from the circuit board side. (SELL, SELR and STO circuit boards)

2．パネルシートの外し方

- パネル面よりパネルボリュームのツマミと6角ナットをはずすと，シートをはずす事が出来ます。(EFF, EQ シート)
- シート側より止めネジを外す事でシートをはずす事が出来ます。(SELL, SELR, STOシート)

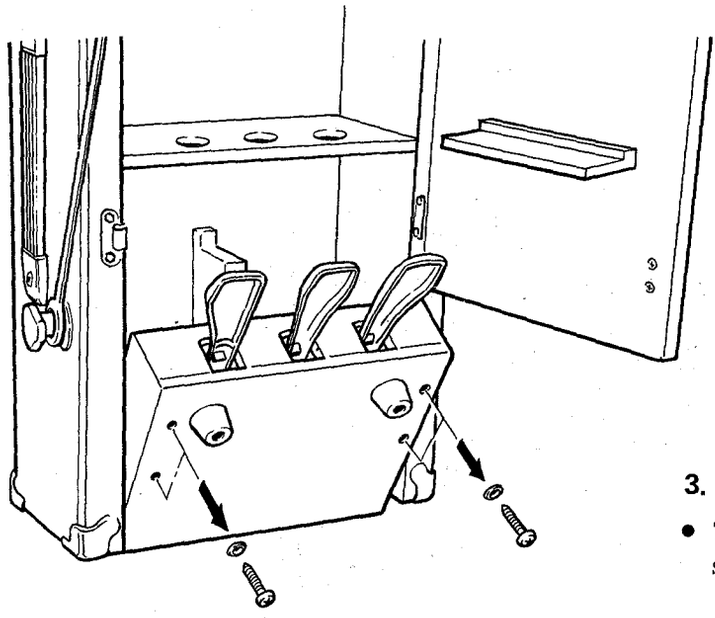

3. Pedal switch removal

- To remove the pedal cover, remove the four screws on the bottom.

3．ペダルスイッチの外し方

●ペダル下部の止めネジ4本をはずす事でペダルカバーを外す事が出来ます。

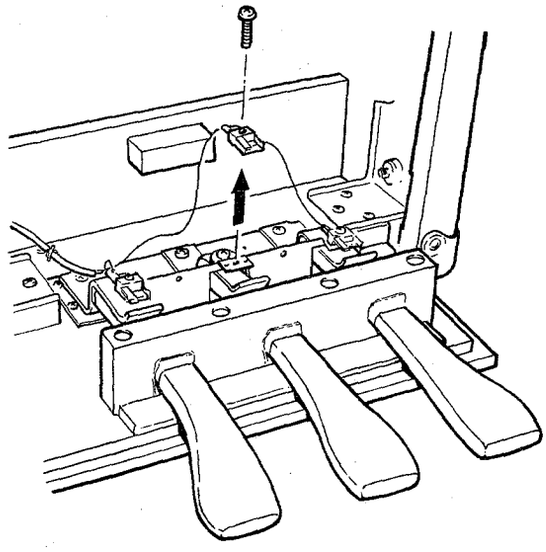

- To remove the switch, remove the set screw fixing the switch.

●止めネジを外す事でスイッチを取り出す事が出来ます。

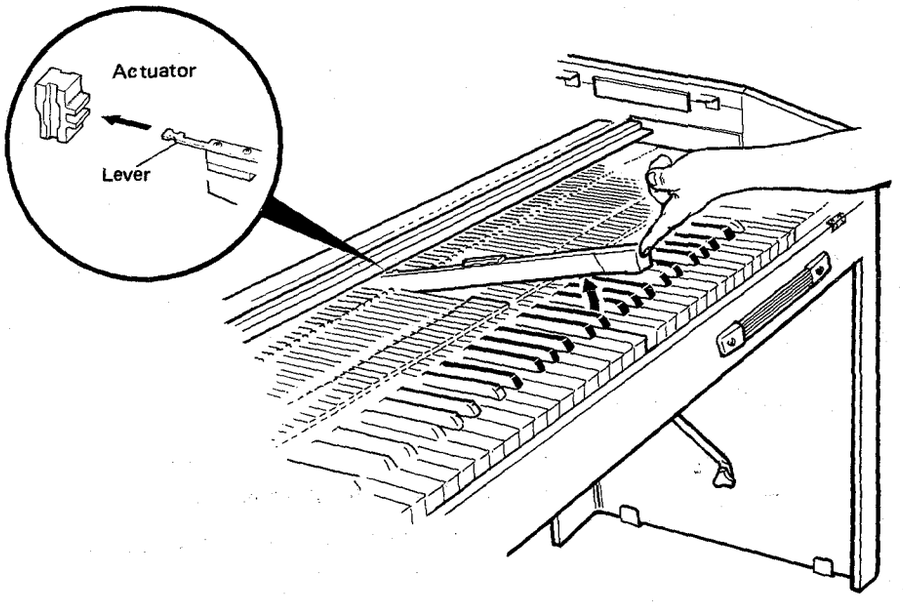

4. Key removal

- To remove a key, lift its end as illustrated and pull it toward you.
- When replacing the key, fit the lever to the depression of the actuator.

4．鍵盤の外し方

- 図の様に鍵盤の手前側を持ち上げて手前に引き出せば鍵盤を外すことが出来ます。
- 鍵盤をもとにもどす時には，レバーがアクチェータの凹部に入るように位置を合わせて下さい。

LSI PIN FUNCTION

Part Name	Name	Function	Q'ty	
			GS1	GS2
YM31100	KC	Key Coder	1	1
YM31200	CP	Channel Prossesor	1	1
YM34400	PG	Phase Generator	8	4
YM34501	OPC	Operator-Carrier	4	2
YM34502	OPM	Operator-Modulator	4	2
YM34700	VRG	Voice Register	8	4
YM32100	EG	Envelope Generator	8	4
YM32200	EC	Envelope Controller	8	4
YM31800	MPX	Multiplexer	4	0
YM32000	IG	Initial touch Generator	1	1
YM33400	AG	After touch Generator	1	0
YM31600	ACC	Accumulator	4	2
YM32700	ADD	Adder	2	1

Part Name	YM31100	Function	KC (Key Coder)

Terminal Pin No.	Terminal Name	Description		
1	VSS	Ground(OV)		
2	$\overline{16Y16}$	16 time slot synchro data: 〔←CP〕	IN	
3	T	Test Pin	IN	
4	$\overline{LP}$	Damp data 〔← Damper Pedal〕	IN	
5	$\overline{L7}$	($C_6^\# \sim C_7$)		Octave Block Terminals
6	$\overline{L6}$	($C_5^\# \sim C_6$)		
7	$\overline{L5}$	($C_4^\# \sim C_5$)		
8	$\overline{L4}$	($C_3^\# \sim C_4$)		
9	$\overline{L3}$	($C_2^\# \sim C_3$)		
10	$\overline{L2}$	($C_1^\# \sim C_2$)		
11	$\overline{L1}$	($C_0^\# \sim C_1$)		
12	$\overline{L0}$	($C_{-1}^\# \sim C_0$)		
13	$\overline{C\#2}$	2nd contact	$C^\#$	Note Block Terminals
14	$\overline{C\#1}$	1st contact		
15	$\overline{D2}$	2nd contact	D	
16	$\overline{D1}$	1st contact		
17	$\overline{D\#2}$	2nd contact	$D^\#$	
18	$\overline{D\#1}$	1st contact		
19	$\overline{E2}$	2nd contact	E	
20	$\overline{E1}$	1st contact		

Terminal Pin No.	Terminal Name	Description		
40	$\phi 2$	Master clock(1MHz)	IN	
39	$\phi 1$	—do. — (opposite phase of $\phi 2$)		
38	VDD	—12V DC supply	IN	
37	$\overline{SKC}$	Serial Key Code data	OUT 〔→CP〕	
36	$\overline{C1}$	1st contact	C	Note Block Terminals
35	$\overline{C2}$	2nd contact		
34	$\overline{B1}$	1st contact	B	
33	$\overline{B2}$	2nd contact		
32	$\overline{A\#1}$	1st contact	$A^\#$	
31	$\overline{A\#2}$	2nd contact		
30	$\overline{A1}$	1st contact	A	
29	$\overline{A2}$	2nd contact		
28	$\overline{G\#1}$	1st contact	$G^\#$	
27	$\overline{G\#2}$	2nd contact		
26	$\overline{G1}$	1st contact	G	
25	$\overline{G2}$	2nd contact		
24	$\overline{F\#1}$	1st contact	$F^\#$	
23	$\overline{F\#2}$	2nd contact		
22	$\overline{F1}$	1st contact	F	
21	$\overline{F2}$	2nd contact		

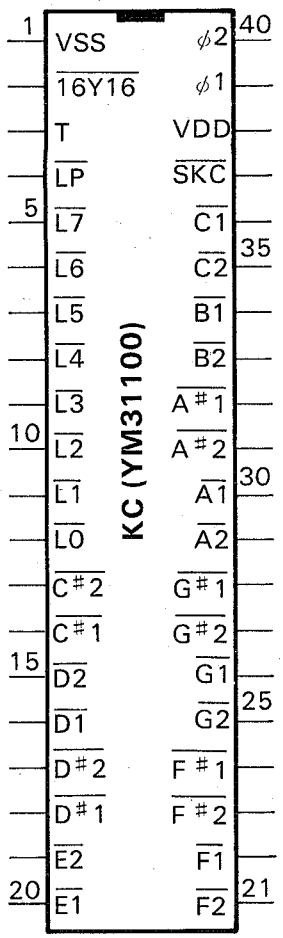

Part Name	YM31200	Function	CP (Channel Prossesor)

Terminal Pin.No.	Terminal Name	Description
1	VSS	Ground(0V)
2	$\overline{IC}$	Initial clear **IN**
3	NC	
4	NC	
5	NC	
6	NC	
7	$\overline{KC}$	Serial Key Code data **IN** (←KC)
8	$\overline{E7}$	Envelope Counter **IN** (←EC)
9	$\overline{E8}$	
10	$\overline{E9}$	
11	$\overline{E10}$	
12	$\overline{EE}$	Empty channel Detection
13	$\overline{YY}$	Test Pin
14	$\overline{16Y16}$	16 time slot synchro data **OUT**
15	$\overline{9Y9}$	9 time slot synchro data **OUT**
16	ϕB	Master clock(ϕ1 3) **OUT**
17	ϕA	do. (opposite phase to ϕB)
18	$\overline{SCH}$	Not Used
19	$\overline{DP}$	Damp data **OUT**
20	$\overline{D1}$	Decay Data (Key OFF→Decay finish) **OUT**

Terminal Pin.No.	Terminal Name	Description	
40	ϕ2	Master clock(1MHz) **IN**	
39	ϕ1	do. (opposite phase of ϕ2)	
38	VDD	−12V DC supply **IN**	
37	$\overline{SKC}$	Serial Key Code data(9μs×16) **OUT**	
36	$\overline{N1}$	Note data	Parallel Key Code data (1μs×16) **OUT** (➡PG)
35	$\overline{N2}$	Note data	
34	$\overline{N3}$	Note data	
33	$\overline{N4}$	Note data	
32	$\overline{B1}$	Block data	
31	$\overline{B2}$	Block data	
30	$\overline{B3}$	Block data	
29	$\overline{K1}$	Keyboard data	
28	$\overline{K2}$	Keyboard data	
27	$\overline{A1}$	Test Pin	
26	$\overline{NN3}$	Note data	Key Code data for Scaling (3μs×16) (➡VRG)
25	$\overline{NN4}$	Note data	
24	$\overline{BB1}$	Block data	
23	$\overline{BB2}$	Block data	
22	$\overline{BB3}$	Block data	
21	$\overline{A2}$	Channel occupation data **OUT**	

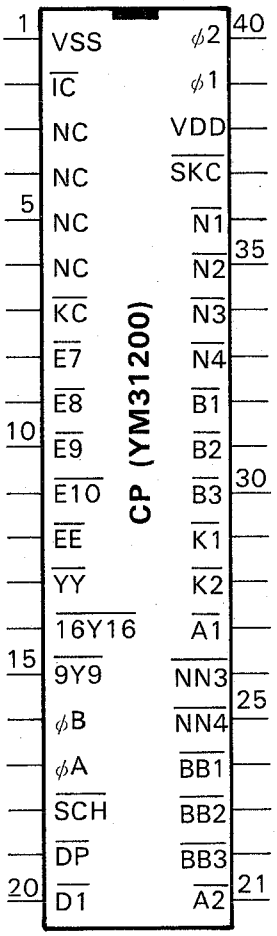

Part Name	YM34400	Function	PG (Phase Generator)

Terminal		Description
Pin No.	Name	
1	VSS	Ground(0V)
2	$\overline{9Y9}$	9 time slot synchro data IN (←CP)
3	$\overline{A2}$	Channel occupation data IN (←CP)
4	$\overline{FN0}$	Frequency Control data IN (←VRG)
5	$\overline{FN1}$	
6	$\overline{FN2}$	
7	$\overline{FN3}$	
8	$\overline{FN4}$	
9	$\overline{P1}$	Pitch Control data IN
10	$\overline{P2}$	
11	$\overline{P3}$	
12	$\overline{P4}$	
13	$\overline{P5}$	
14	$\overline{P6}$	
15	$\overline{P7}$	
16	$\overline{N1}$	Note data
17	$\overline{N2}$	Note data
18	$\overline{N3}$	Note data
19	$\overline{N4}$	Note data
20	$\overline{B1}$	Block data
21	$\overline{B2}$	Block data
22	$\overline{B3}$	Block data
23	$\overline{FD1}$	Detune data IN (←VRG)
24	$\overline{FD2}$	

Terminal		Description
Pin No.	Name	
48	$\phi 2$	Master clock(1MHz) IN
47	$\phi 1$	do. (opposite phase of $\phi 2$)
46	VDD	−12V DC Supply IN
45	$\overline{TO}$	Test Pin
44	$\overline{W1}$	Phase data OUT ωct (➡OPC) ωmt (➡OPM)
43	$\overline{W2}$	
42	$\overline{W3}$	
41	$\overline{W4}$	
40	$\overline{W5}$	
39	$\overline{W6}$	
38	$\overline{W7}$	
37	$\overline{W8}$	
36	$\overline{W9}$	
35	$\overline{W10}$	
34	$\overline{W11}$	
33	$\overline{W12}$	
32	$\overline{YO}$	Synchro data(16 time slot) OUT
31	$\overline{Yi}$	Synchro data(16 time slot) IN
30	$\overline{FR2}$	Random tune data IN
29	$\overline{FR1}$	Random tune data IN
28	$\overline{FD6}$	Detune data IN (←VRG)
27	$\overline{FD5}$	
26	$\overline{FD4}$	
25	$\overline{FD3}$	

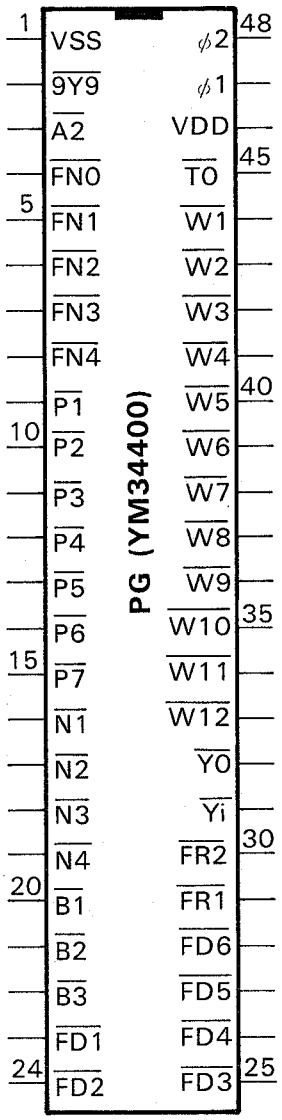

Part Name	YM34501	Function	OPC (Operator-Carrier)

Terminal Pin.No.	Terminal Name	Description
1	VSS	Ground(0V)
2	$\overline{M1}$	Modulation data IN (←OPM) I(t)sin ωmt
3	$\overline{M2}$	
4	$\overline{M3}$	
5	$\overline{M4}$	
6	$\overline{M5}$	
7	$\overline{M6}$	
8	$\overline{M7}$	
9	$\overline{M8}$	
10	$\overline{M9}$	
11	$\overline{M10}$	
12	$\overline{C1}$	Phase data IN (←PG) ωct
13	$\overline{C2}$	
14	$\overline{C3}$	
15	$\overline{C4}$	
16	$\overline{C5}$	
17	$\overline{C6}$	
18	$\overline{C7}$	
19	$\overline{C8}$	
20	$\overline{C9}$	
21	$\overline{C10}$	
22	$\overline{E1}$	Envelope Control data IN For Modulation depth (←EG) A(t)
23	$\overline{E2}$	
24	$\overline{E3}$	

Terminal Pin.No.	Terminal Name	Description
48	$\phi 2$	Master clock(1MHz) IN
47	$\phi 1$	--do.-- (opposite phase of $\phi 2$)
46	VDD	−12V DC Supply IN
45	$\overline{A1}$	Sound source waveform data OUT (➡ACC) A(t)sin {ωct+I(t)sin ωmt}
44	$\overline{A2}$	
43	$\overline{A3}$	
42	$\overline{A4}$	
41	$\overline{A5}$	
40	$\overline{A6}$	
39	$\overline{A7}$	
38	$\overline{A8}$	
37	$\overline{A9}$	
36	$\overline{A10}$	
35	$\overline{A11}$	
34	$\overline{A12}$	
33	$\overline{A13}$	
32	$\overline{A14}$	
31	$\overline{E10}$	Envelope Control data IN for Amplitude (←EG) A(t)
30	$\overline{E9}$	
29	$\overline{E8}$	
28	$\overline{E7}$	
27	$\overline{E6}$	
26	$\overline{E5}$	
25	$\overline{E4}$	

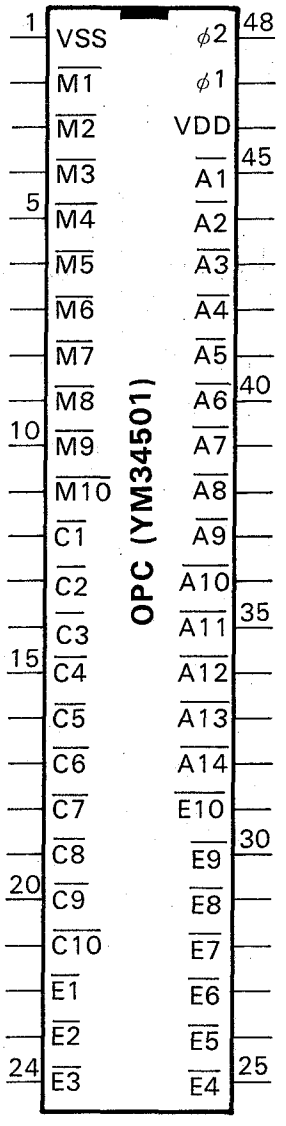

Part Name	YM34502	Function	OPM (Operator-Modulator)

Terminal Pin No.	Terminal Name	Description
1	VSS	Ground(0V)
2	$\overline{M1}$	Modulation data IN (←OPM) I(t)sin ωmt (for CROSS MODULATION)
3	$\overline{M2}$	
4	$\overline{M3}$	
5	$\overline{M4}$	
6	$\overline{M5}$	
7	$\overline{M6}$	
8	$\overline{M7}$	
9	$\overline{M8}$	
10	$\overline{M9}$	
11	$\overline{M10}$	
12	$\overline{C1}$	Phase data IN (←PG) ωmt
13	$\overline{C2}$	
14	$\overline{C3}$	
15	$\overline{C4}$	
16	$\overline{C5}$	
17	$\overline{C6}$	
18	$\overline{C7}$	
19	$\overline{C8}$	
20	$\overline{C9}$	
21	$\overline{C10}$	
22	$\overline{E1}$	Envelope Control data IN For Modulation depth I(t) (←EG)
23	$\overline{E2}$	
24	$\overline{E3}$	

Terminal Pin No.	Terminal Name	Description
48	ϕ2	Master clock(1MHz) IN
47	ϕ1	—do.— (opposite phase of ϕ2)
46	VDD	−12V DC Supply IN
45	$\overline{G1}$	FM mode Selection data IN (←VRG)
44	$\overline{G2}$	
43	$\overline{A3}$	Frequency Modulation data OUT (←OPC) I(t)sin ωmt
42	$\overline{A4}$	
41	$\overline{A5}$	
40	$\overline{A6}$	
39	$\overline{A7}$	
38	$\overline{A8}$	
37	$\overline{A9}$	
36	$\overline{A10}$	
35	$\overline{A11}$	
34	$\overline{A12}$	
33	$\overline{A13}$	
32	$\overline{A14}$	
31	$\overline{E10}$	Envelope Control data IN For Modulation depth (←EG) I(t)
30	$\overline{E9}$	
29	$\overline{E8}$	
28	$\overline{E7}$	
27	$\overline{E6}$	
26	$\overline{E5}$	
25	$\overline{E4}$	

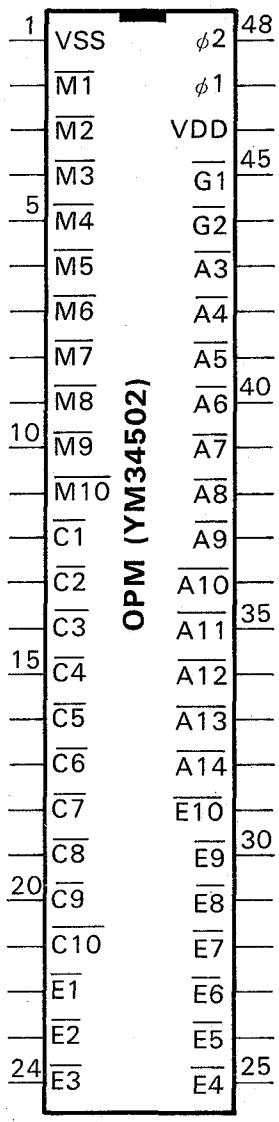

Part Name	YM34700	Function	VRG (Voice Register)

Terminal Pin No.	Terminal Name	Description
1	VSS	Ground(0V)
2	$\overline{NN3}$	Note data } Key Code data IN (←CP) (3μs×16) For scaling
3	$\overline{NN4}$	Note data
4	$\overline{BB1}$	Block data
5	$\overline{BB2}$	Block data
6	$\overline{BB3}$	Block data
7	$\overline{SS1}$	Envelope State data IN (←EG)
8	$\overline{SS2}$	
9	$\overline{LOAD}$	Latch timing data IN (←RW)
10	$\overline{DIN}$	Serial Tone data(256μs). IN
11	$\overline{G2}$	FM mode select data OUT (→OPM)
12	$\overline{G1}$	
13	$\overline{FD6}$	Detune data OUT (→PG)
14	$\overline{FD5}$	
15	$\overline{FD4}$	
16	$\overline{FD3}$	
17	$\overline{FD2}$	
18	$\overline{FD1}$	
19	$\overline{FN4}$	Frequency Control data OUT
20	$\overline{FN3}$	
21	$\overline{FN2}$	
22	$\overline{FN1}$	
23	$\overline{FNO}$	Octave (→PG)
24	$\overline{TL10}$	Total Level control data OUT (→EC)

Terminal Pin No.	Terminal Name	Description
48	φB	Master clock(φ1/3) IN
47	φA	–do.– (opposite phase of φB)
46	VDD	–12V DC Supply IN
45	$\overline{M}$	Envelope Mode control OUT (→EG)
44	$\overline{R1}$	Rate control data OUT (→EG) (Attack, 1st decay, 2nd decay / Release time)
43	$\overline{R2}$	
42	$\overline{R3}$	
41	$\overline{R4}$	
40	$\overline{R5}$	
39	$\overline{R6}$	
38	$\overline{L5}$	Level control data OUT (→EG) (Initial level and 1st decay level)
37	$\overline{L6}$	
36	$\overline{L7}$	
35	$\overline{L8}$	
34	$\overline{L9}$	
33	$\overline{L10}$	
32	$\overline{ITS1}$	Initial touch response Sensitivity control data OUT (→EC)
31	$\overline{ITS2}$	
30	$\overline{TL4}$	Total Level control data OUT (→EC)
29	$\overline{TL5}$	
28	$\overline{TL6}$	
27	$\overline{TL7}$	
26	$\overline{TL8}$	
25	$\overline{TL9}$	

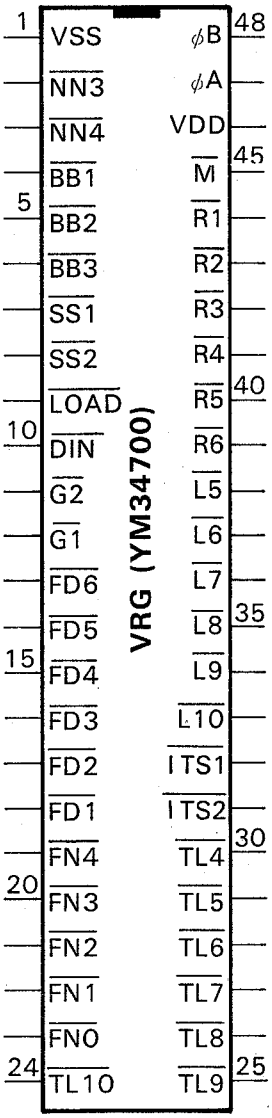

Part Name	YM32100	Function	EG (Envelope Generator)

Terminal		Description
Pin No.	Name	
1	VSS	Ground(0V)
2	$\overline{E}$	Not Used
3	$\overline{A2}$	Channel Occupation data IN (← CP)
4	$\overline{D1}$	Decay data IN (Key OFF→Decay finish)(← CP)
5	$\overline{DP}$	Damp data IN (← CP)
6	$\overline{M}$	Envelope Mode Control data IN (← VRG)
7	$\overline{R1}$	Rate Control data IN (← VRG) (Attack, 1st decay, 2nd decay and Release time)
8	$\overline{R2}$	
9	$\overline{R3}$	
10	$\overline{R4}$	
11	$\overline{R5}$	
12	$\overline{R6}$	
13	$\overline{L5}$	Level Control data IN (← VRG) (Initial level and 1st Decay level)
14	$\overline{L6}$	
15	$\overline{L7}$	
16	$\overline{L8}$	
17	$\overline{L9}$	
18	$\overline{L10}$	
19	T	Test Pin
20	T	Test Pin

Terminal		Description
Pin No.	Name	
40	$\phi 2$	Master clock(1MHz) IN
39	$\phi 1$	-do.- (opposite phase of $\phi 2$)
38	VDD	−12V DC Supply IN
37	ϕB	Master clock($\phi 1$ /3) IN
36	ϕA	-do.- (opposite phase of ϕB)
35	$\overline{SS1}$	Envelope State data OUT (At, 1D, 2D, R) (→ VRG)
34	$\overline{SS2}$	
33	$\overline{S1}$	Not Used
32	$\overline{S2}$	Not Used
31	$\overline{E1}$	Envelope data OUT (→ EC)
30	$\overline{E2}$	
29	$\overline{E3}$	
28	$\overline{E4}$	
27	$\overline{E5}$	
26	$\overline{E6}$	
25	$\overline{E7}$	
24	$\overline{E8}$	
23	$\overline{E9}$	
22	$\overline{E10}$	
21	T	Test Pin

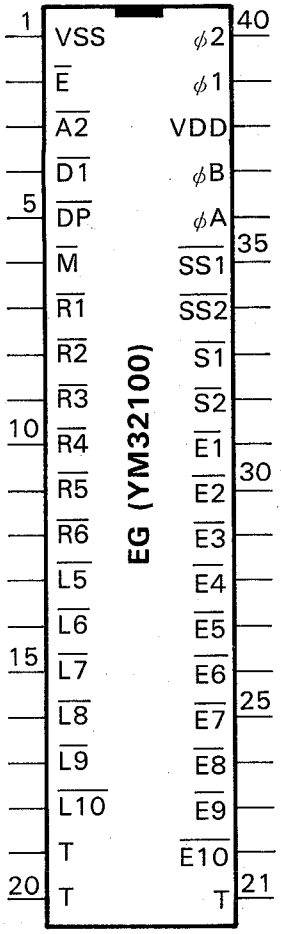

Part Name	YM32200	Function	EC (Envelope Controller)

Terminal Pin No.	Terminal Name	Description
1	VSS	Ground(0V)
2	$\overline{E1}$	Envelope data IN (←EG)
3	$\overline{E2}$	
4	$\overline{E3}$	
5	$\overline{E4}$	
6	$\overline{E5}$	
7	$\overline{E6}$	
8	$\overline{E7}$	
9	$\overline{E8}$	
10	$\overline{E9}$	
11	$\overline{E10}$	
12	$\overline{T1}$	Touch Control data IN (←IG) (←AG)
13	$\overline{T2}$	
14	$\overline{T3}$	
15	$\overline{T4}$	
16	$\overline{T5}$	
17	$\overline{T6}$	
18	$\overline{T7}$	
19	$\overline{T8}$	
20	$\overline{T9}$	
21	$\overline{T10}$	
22	$\overline{ITS1}$	Initial touch response Sensitivity Control data IN (←VRG)
23	$\overline{ITS2}$	
24	$\overline{ATS1}$	After touch response sensitivity Control data IN (←Switch)

Terminal Pin No.	Terminal Name	Description
48	$\phi 2$	Master clock(1MHz) IN
47	$\phi 1$	do. (opposite phase of $\phi 2$)
46	VDD	−12V DC supply IN
45	ϕB	Master clock($\phi 1$ 3) IN
44	ϕA	do. (opposite phase of ϕB)
43	$\overline{EC1}$	Envelope Control data OUT (➡OPC) (➡OPM)
42	$\overline{EC2}$	
41	$\overline{EC3}$	
40	$\overline{EC4}$	
39	$\overline{EC5}$	
38	$\overline{EC6}$	
37	$\overline{EC7}$	
36	$\overline{EC8}$	
35	$\overline{EC9}$	
34	$\overline{EC10}$	
33	$\overline{EE}$	Envelope Control data (Empty channel detection) OUT (➡CP)
32	$\overline{TL10}$	Total Level Control data IN (←VRG)
31	$\overline{TL9}$	
30	$\overline{TL8}$	
29	$\overline{TL7}$	
28	$\overline{TL6}$	
27	$\overline{TL5}$	
26	$\overline{TL4}$	
25	$\overline{ATS2}$	After touch response sensitivity control data IN (←Switch)

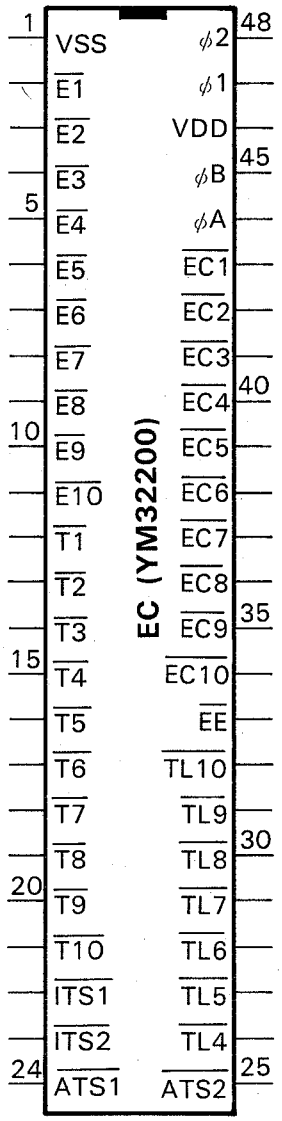

Part Name	YM31800	Function	MPX (Multiplexer)

Terminal Pin No.	Terminal Name	Description
1	VSS	Ground(0V)
2	$\overline{SKC}$	Serial Key Code data (9/16 × 16) IN (←CP)
3	$\overline{CB1}$	Block data IN
4	$\overline{CB2}$	Block data IN
5	$\overline{CB3}$	Not Used
6	$\overline{CK1}$	Keyboard data IN
7	$\overline{CK2}$	Keyboard data IN
8	C0	After touch voltage IN (0V~−8V)
9	C#1	
10	D1	
11	D#1	
12	E1	
13	F1	
14	F#1	
15	G1	
16	G#1	
17	A1	
18	A#1	
19	B1	
20	C1	

Terminal Pin No.	Terminal Name	Description
40	ϕ2	Master clock(1MHz) IN
39	ϕ1	—do.— (opposite phase of ϕ2)
38	VDD	−12V DC Supply IN
37	$\overline{9Y9}$	9 time slot synchro data IN (←CP)
36	NC	—
35	NC	—
34	A0	After touch data OUT (→AG)
33	N	After touch voltage IN (0V~−8V)
32	C3	
31	B2	
30	A#2	
29	A2	
28	G#2	
27	G2	
26	F#2	
25	F2	
24	E2	
23	D#2	
22	D2	
21	C#2	

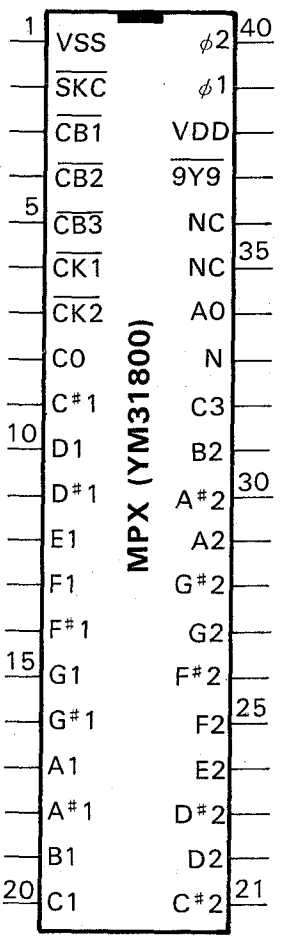

Part Name	YM32000	Function	IG (Initial Touch Generator)

Terminal Pin No.	Terminal Name	Description
1	VSS	Ground(0V)
2	T	Test Pin
3	$\overline{U1E}$	UK Enable data **IN**
4	$\overline{L1E}$	LK Enable data **IN**
5	$\overline{P1E}$	PK Enable data **IN**
6	$\overline{K1}$	Keyboard data **IN**〔←CP〕
7	$\overline{K2}$	Keyboard data **IN**〔←CP〕
8	$\overline{A2}$	Channel occupation data **IN**〔←CP〕
9	$\overline{D1}$	Decay data (Key OFF→ Decay finish) **IN**〔←CP〕
10	NC	
11	NC	
12	$\overline{T10}$	Initial Touch data **OUT**

Terminal Pin No.	Terminal Name	Description
24	ϕB	Master clock **IN**〔←CP〕
23	ϕA	do. (opposite phase of ϕB)
22	VDD	−12V DC Supply **IN**
21	$\overline{T1}$	Initial Touch data **OUT**〔➡EC〕
20	$\overline{T2}$	
19	$\overline{T3}$	
18	$\overline{T4}$	
17	$\overline{T5}$	
16	$\overline{T6}$	
15	$\overline{T7}$	
14	$\overline{T8}$	
13	$\overline{T9}$	

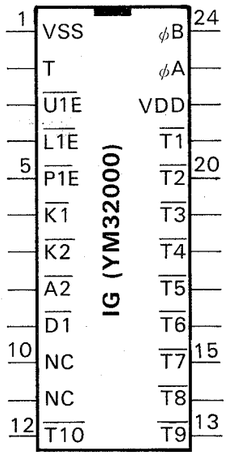

Part Name	YM33400	Function	AG (After Touch Generator)

Terminal Pin No.	Terminal Name	Description
1	VSS	Ground(0V)
2	T	Test Pin
3	$\overline{DCL}$	Clock for Test
4	T	Test Pin
5	$\overline{SKC}$	Serial Key Code data (9bits×16) **IN**〔←CP〕
6	$\overline{UP}$	Damper Data(U) **IN**
7	$\overline{LP}$	Damper Data(L) **IN**
8	$\overline{PP}$	Damper Data(P) **IN**
9	$\overline{UAF}$	Keyboard Selection data(U) **IN**
10	$\overline{LAF}$	Keyboard Selection data(L) **IN**
11	$\overline{PAF}$	Keyboard Selection data(P) **IN**
12	$\overline{A2}$	Channel occupation data **IN**〔←CP〕
13	$\overline{D1}$	Decay data (Key OFF→Decay finish) **IN**〔←CP〕
14	$\overline{DP}$	Decay finish data **IN**〔←CP〕
15	$\overline{SCH}$	Not Used
16	$\overline{9Y9}$	9 time slot synchro data **IN**〔←CP〕
17	$\overline{C}$	After touch data(Serial) **IN**
18	$\overline{Q8}$	Counter Output for A-D Conversion **OUT**
19	$\overline{Q7}$	
20	$\overline{Q6}$	

Terminal Pin No.	Terminal Name	Description
40	ϕ2	Master clock **IN**
39	ϕ1	—do.— (opposite phase of ϕ2)
38	VDD	−12V DC Supply **IN**
37	ϕB	Master clock(ϕ1/3) **IN**
36	NC	—
35	$\overline{T1}$	After Touch data **OUT**
34	$\overline{T2}$	
33	$\overline{T3}$	
32	$\overline{T4}$	
31	$\overline{T5}$	
30	$\overline{T6}$	
29	$\overline{T7}$	
28	$\overline{T8}$	
27	$\overline{T9}$	
26	$\overline{T10}$	
25	$\overline{Q1}$	Counter output for A-D Conversion **OUT**
24	$\overline{Q2}$	
23	$\overline{Q3}$	
22	$\overline{Q4}$	
21	$\overline{Q5}$	

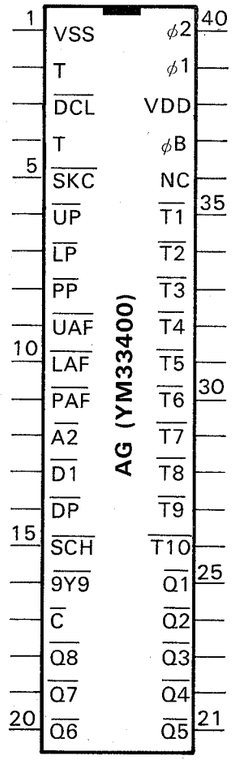

Part Name	

Terminal Pin No.	Terminal Name	D
1	VSS	Ground(0
2	$\overline{16Y16}$	16 time slot s
3	$\overline{K1}$	Keyboard
4	$\overline{K2}$	Keyboard
5	$\overline{A1}$	Sound s data
6	$\overline{A2}$	
7	$\overline{A3}$	
8	$\overline{A4}$	
9	$\overline{A5}$	
10	$\overline{A6}$	
11	$\overline{A7}$	
12	$\overline{A8}$	

Part Name	

Terminal Pin No.	Terminal Name	D
1	VSS	Ground(C
2	$\overline{16Y16}$	16 time slot s
3	$\overline{IN1}$	Serial sound s
4	$\overline{IN2}$	Serial sound s
5	$\overline{M}$	Not Usec
6	S3	Maltipl
7	S2	
8	S1	
9	$\overline{B11}$	Digital Analc
10	$\overline{B10}$	
11	$\overline{B9}$	
12	$\overline{B8}$	

ch Generator)

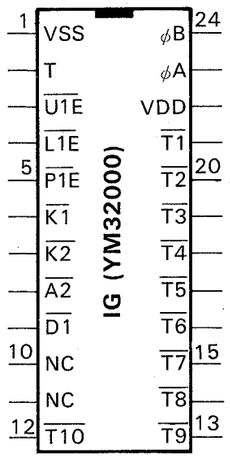

Part Name	YM33400	Function	AG (After Touch Generator)

Terminal Pin No.	Terminal Name	Description
1	VSS	Ground(0V)
2	T	Test Pin
3	DCL	Clock for Test
4	T	Test Pin
5	SKC	Serial Key Code data (9//s×16) IN {←CP}
6	UP	Damper Data(U) IN
7	LP	Damper Data(L) IN
8	PP	Damper Data(P) IN
9	UAF	Keyboard Selection data(U) IN
10	LAF	Keyboard Selection data(L) IN
11	PAF	Keyboard Selection data(P) IN
12	A2	Channel occupation data IN {←CP}
13	D1	Decay data (Key OFF→Decay finish) IN {←CP}
14	DP	Decay finish data IN {←CP}
15	SCH	Not Used
16	9Y9	9 time slot synchro data IN {←CP}
17	C	After touch data(Serial) IN
18	Q8	Counter Output for A-D Conversion OUT
19	Q7	
20	Q6	

Terminal Pin No.	Terminal Name	Description
40	φ2	Master clock IN
39	φ1	—do.— (opposite phase of φ2)
38	VDD	—12V DC Supply IN
37	φB	Master clock(φ1/3) IN
36	NC	—
35	T1	After Touch data OUT
34	T2	
33	T3	
32	T4	
31	T5	
30	T6	
29	T7	
28	T8	
27	T9	
26	T10	
25	Q1	Counter output for A-D Conversion OUT
24	Q2	
23	Q3	
22	Q4	
21	Q5	

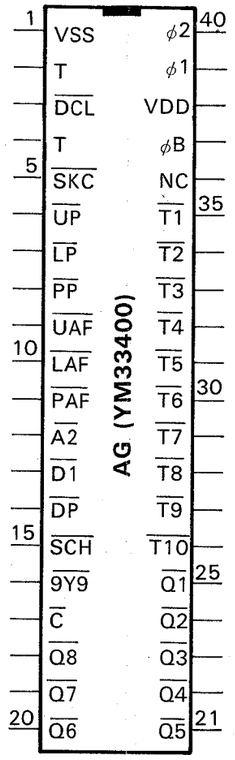

Part Name	YM31600	Function	ACC (Accumulator)

Terminal Pin No.	Terminal Name	Description
1	VSS	Ground(0V)
2	16Y16	16 time slot synchro data IN {←CP}
3	K1	Keyboard data IN {←CP}
4	K2	Keyboard data IN {←CP}
5	A1	Sound source waveform data IN {←OPC}
6	A2	
7	A3	
8	A4	
9	A5	
10	A6	
11	A7	
12	A8	

Terminal Pin No.	Terminal Name	Description
24	φ2	Master clock(1MHz) IN
23	φ1	—do.— (opposite phase of φ2)
22	VDD	—12V DC Supply IN
21	U	UK } Serial Sound source waveform data OUT {→ADD}
20	L	LK
19	P	PK
18	A14	Sound source waveforme data IN {←OPC}
17	A13	
16	A12	
15	A11	
14	A10	
13	A9	

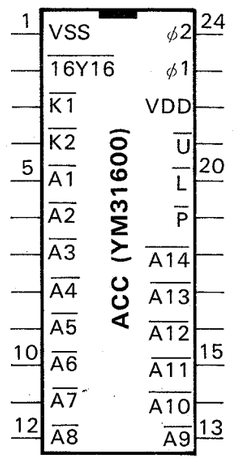

Part Name	YM32700	Function	ADD (Adder)

Terminal Pin No.	Terminal Name	Description
1	VSS	Ground(0V)
2	16Y16	16 time slot synchro data IN {←CP}
3	IN1	Serial sound source data IN {←ACC}
4	IN2	Serial sound source data IN {←ACC}
5	M	Not Used
6	S3	Maltiplex data OUT {→MPX}
7	S2	
8	S1	
9	B11	Digital code for Analog convert OUT {→DAC}
10	B10	
11	B9	
12	B8	

Terminal Pin No.	Terminal Name	Description
24	φ2	Master clock(1MHz) IN
23	φ1	do. (opposite phase of φ2)
22	VDD	—12V DC Supply IN
21	OUT	
20	Y	Gate control data OUT
19	B1	Degital code for Analog convert OUT {→DAC}
18	B2	
17	B3	
16	B4	
15	B5	
14	B6	
13	B7	

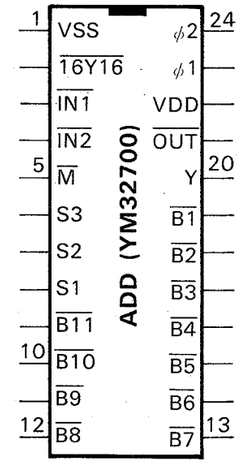

FM

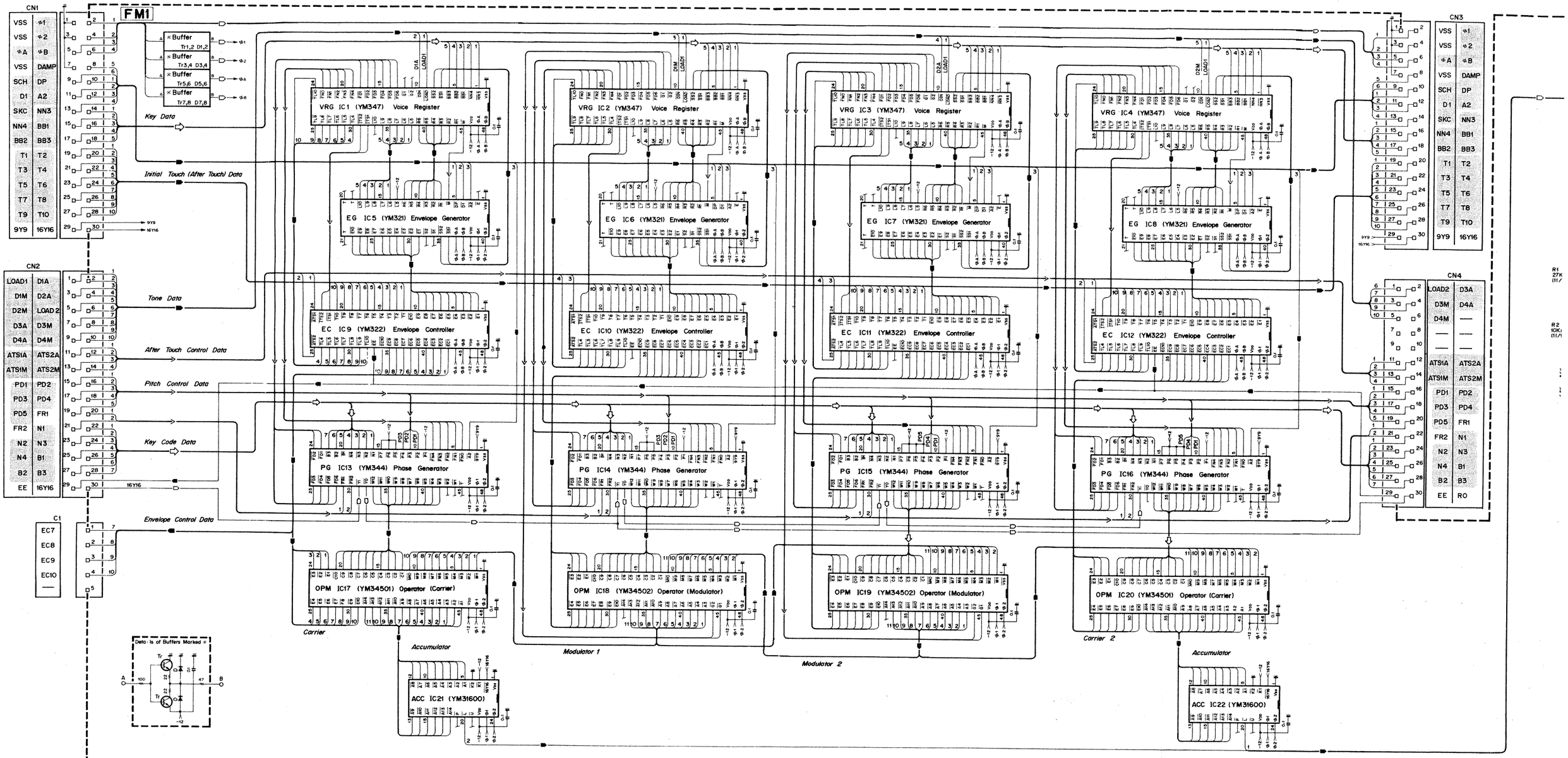
FM1
CN1
VSS Φ1
VSS Φ2
ΦA ΦB
VSS DAMP
SCH DP
D1 A2
SKC NN3
NN4 BB1
BB2 BB3
T1 T2
T3 T4
T5 T6
T7 T8
T9 T10
9Y9 16Y16
CN2
LOAD1 D1A
D1M D2A
D2M LOAD2
D3A D3M
D4A D4M
ATS1A ATS2A
ATS1M ATS2M
PD1 PD2
PD3 PD4
PD5 FR1
FR2 N1
N2 N3
N4 B1
B2 B3
EE 16Y16
C1
EC7
EC8
EC9
EC10
× Buffer Tr1,2 D1,2
× Buffer Tr3,4 D3,4
× Buffer Tr5,6 D5,6
× Buffer Tr7,8 D7,8
Key Data
Initial Touch (After Touch) Data
Tone Data
After Touch Control Data
Pitch Control Data
Key Code Data
16Y16
Envelope Control Data
9Y9
16Y16
VRG IC1 (YM347) Voice Register
VRG IC2 (YM347) Voice Register
VRG IC3 (YM347) Voice Register
VRG IC4 (YM347) Voice Register
EG IC5 (YM321) Envelope Generator
EG IC6 (YM321) Envelope Generator
EG IC7 (YM321) Envelope Generator
EG IC8 (YM321) Envelope Generator
EC IC9 (YM322) Envelope Controller
EC IC10 (YM322) Envelope Controller
EC IC11 (YM322) Envelope Controller
EC IC12 (YM322) Envelope Controller
PG IC13 (YM344) Phase Generator
PG IC14 (YM344) Phase Generator
PG IC15 (YM344) Phase Generator
PG IC16 (YM344) Phase Generator
OPM IC17 (YM34501) Operator (Carrier)
OPM IC18 (YM34502) Operator (Modulator)
OPM IC19 (YM34502) Operator (Modulator)
OPM IC20 (YM34501) Operator (Carrier)
ACC IC21 (YM31600)
ACC IC22 (YM31600)
Carrier
Accumulator
Modulator 1
Modulator 2
Carrier 2
Accumulator
Details of Buffers Marked ×
CN3
CN4
R1 27K (1/4)
R2 10K (1/4)

FM Circuit Diagram

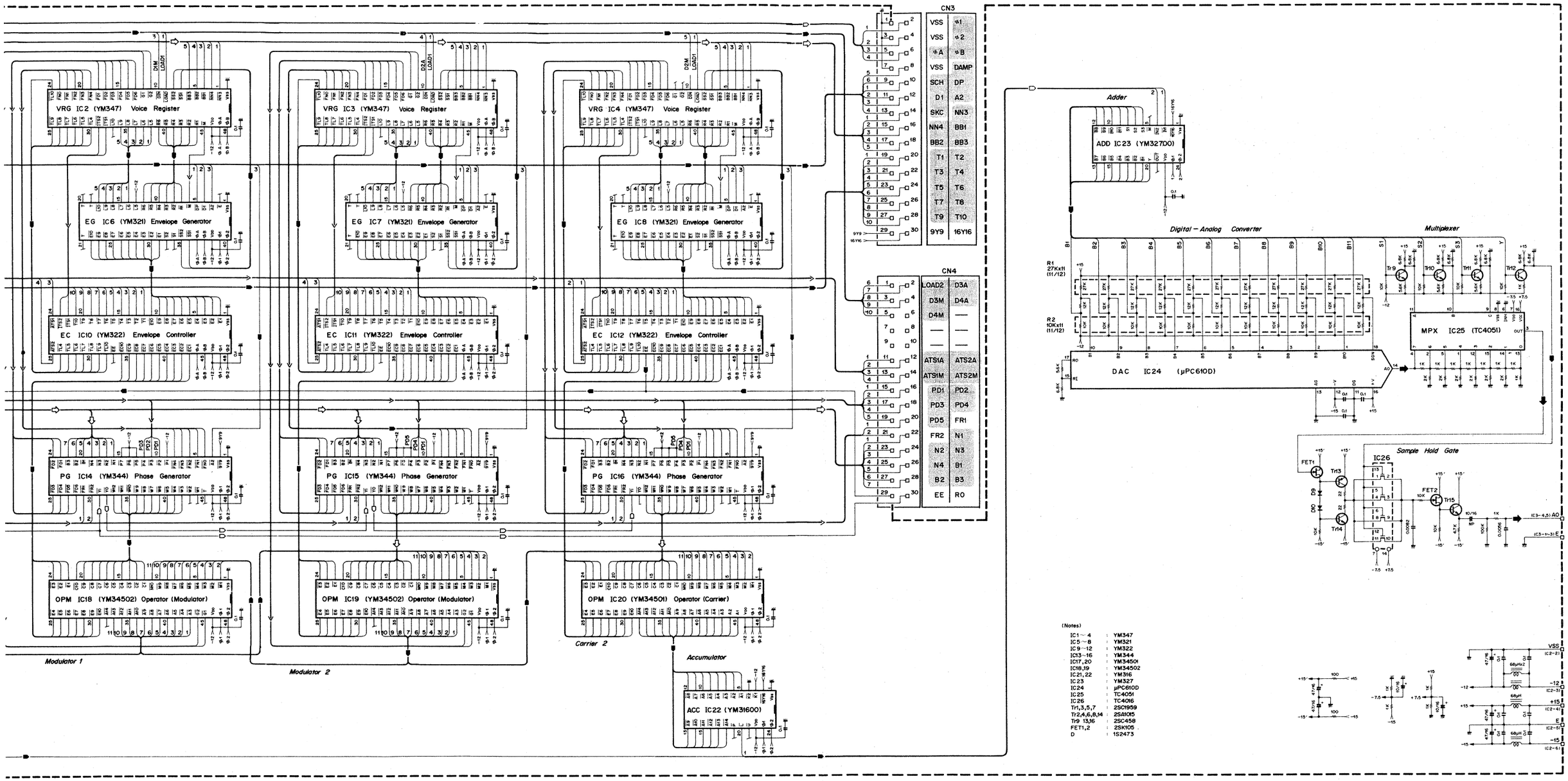

(Notes)

IC1～4	:	YM347
IC5～8	:	YM321
IC9～12	:	YM322
IC13～16	:	YM344
IC17,20	:	YM34501
IC18,19	:	YM34502
IC21,22	:	YM316
IC23	:	YM327
IC24	:	μPC610D
IC25	:	TC4051
IC26	:	TC4016
Tr1,3,5,7	:	2SC1959
Tr2,4,6,8,14	:	2SA1015
Tr9 13,16	:	2SC458
FET1,2	:	2SK105
D	:	1S2473

GS1

C3

5	A0
4	A0
3	E
2	E
1	E

C2

6	–15
5	E
4	+15
3	–12
2	Vss
1	–

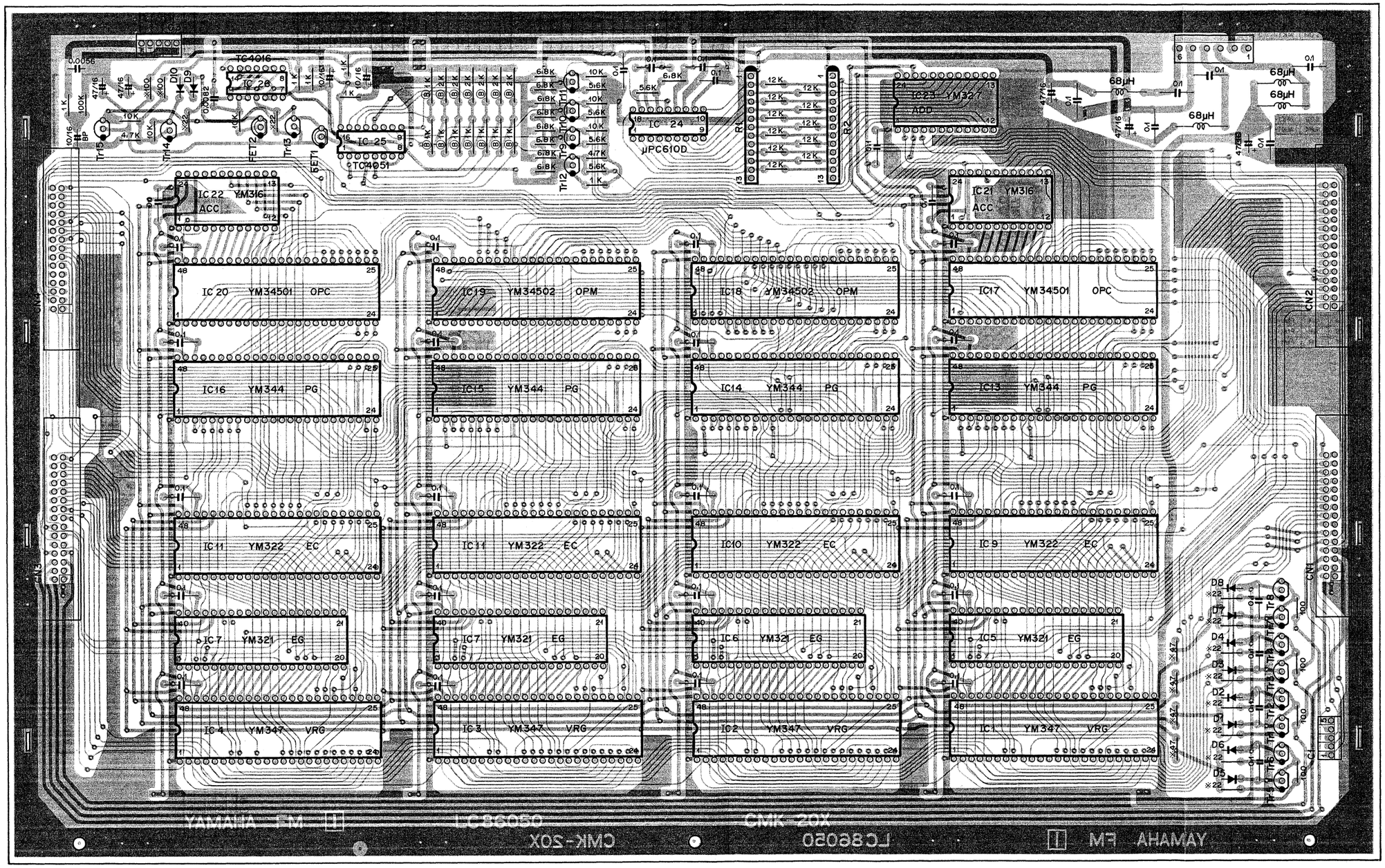

C1

5	
4	E10
3	E9
2	E8
1	E7

View from the component side of the circuit board

C1

Pin No.	Pin Name	Wire Color	Destination
1	E7	BR	KC-E7 (C8-5)
2	E8	RE	KC-E8 (C8-4)
3	E9	OR	KC-E9 (C8-3)
4	E10	YE	KC-E10 (C8-2
5			

C2

Pin No.	Pin Name	Wire Color	Destination
1	–	–	–
2	Vss	BL	DC-Vss (C6-2)
3	–12	BE	DC- –12 (C6-
4	+15	OR	DC-+15 (C6-6
5	E	BL	DC-E (C6-5)
6	–15	BR	DC- –15 (C6-

C3

Pin No.	Pin Name	Wire Color	Destination
1	E	–	–
2	E	–	–
3	E	S GR S	A-E (C8-4)
4	AO	S GR	A-AI1 (C8-5)
5	AO	–	–

C2

Pin No.	Pin Name	Wire Color	Destination
1	–	–	–
2	Vss	BL	DC-Vss (C5-2)
3	–12	BE	DC- –12 (C5-3
4	+15	OR	DC-+15 (C5-6)
5	E	BL	DC-E (C5-5)
6	–15	BR	DC- –15 (C5-4

C3

Pin No.	Pin Name	Wire Color	Destination
1	E	–	–
2	E	–	–
3	E	S BE S	A-E (C8-2)
4	AO	S BE	A-AI2 (C8-1)
5	AO	–	–

FM Circuit Board & Wiring

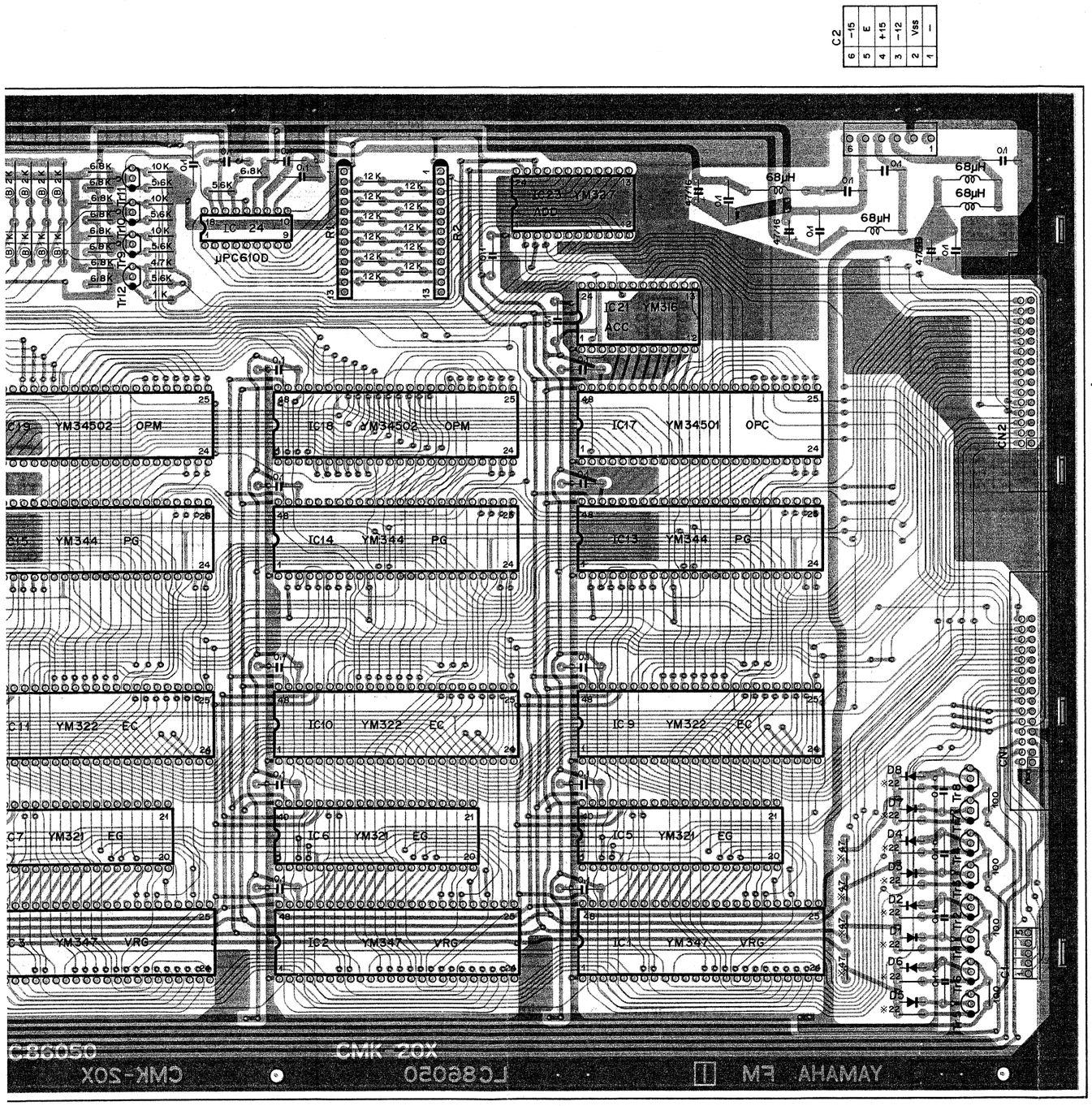

GS1

C1

Pin No.	Pin Name	Wire Color	Destination
1	E7	BR	KC-E7 (C8-5)
2	E8	RE	KC-E8 (C8-4)
3	E9	OR	KC-E9 (C8-3)
4	E10	YE	KC-E10 (C8-2)
5			

C2

Pin No.	Pin Name	Wire Color	Destination
1	–	–	–
2	Vss	BL	DC-Vss (C6-2)
3	–12	BE	DC- –12 (C6-3)
4	+15	OR	DC-+15 (C6-6)
5	E	BL	DC-E (C6-5)
6	–15	BR	DC- –15 (C6-4)

C3

Pin No.	Pin Name	Wire Color	Destination
1	E	–	–
2	E	–	–
3	E	S GR S	A-E (C8-4)
4	AO	S GR	A-AI1 (C8-5)
5	AO	–	–

C2

Pin No.	Pin Name	Wire Color	Destination
1	–	–	–
2	Vss	BL	DC-Vss (C5-2)
3	–12	BE	DC- –12 (C5-3)
4	+15	OR	DC-+15 (C5-6)
5	E	BL	DC-E (C5-5)
6	–15	BR	DC- –15 (C5-4)

C3

Pin No.	Pin Name	Wire Color	Destination
1	E	–	–
2	E	–	–
3	E	S BE S	A-E (C8-2)
4	AO	S BE	A-AI2 (C8-1)
5	AO	–	–

C1

5	
4	E10
3	E9
2	E8
1	E7

GS2

C1

Pin No.	Pin Name	Wire Color	Destination
1	E7	YE	KC-E7 (C8-5)
2	E8	YE	KC-E8 (C8-4)
3	E9	YE	KC-E9 (C8-3)
4	E10	YE	KC-E10 (C8-2)
5	–	–	–

C2

Pin No.	Pin Name	Wire Color	Destination
1	–	–	–
2	Vss	BL	DC-Vss (C5-2)
3	–12	BE	DC- –12 (C5-3)
4	+15	OR	DC-+15 (C5-6)
5	E	BL	DC-E (C5-5)
6	–15	BR	DC- –15 (C5-4)

C3

Pin No.	Pin Name	Wire Color	Destination
1	E	–	–
2	E	S GR S	
3	E	S BE S	
4	AO	S GR	A-AI1 (C8-5)
5	AO	S BE	A-AI2 (C8-1)

CN No.	CN Name	Destination
CN1	30P FLAT CABLE	(to KC-CN2)
CN2	20P FLAT CABLE	(to KC-CN3)

(Notes)

1. Circuit Board : LC86510 [1]
2. Transistors
   - Tr1, 3, 5, 7 : 2SC1959 (O, Y)
   - Tr2, 4, 6, 8, 14 : 2SA1015 (O, Y)
   - Tr9 ~ 13, 15 : 2SC458 (C, D)
3. FET
   - FET1, 2 : 2SK105 (F)
4. IC
   - IC1 ~ 4 : YM347
   - IC5 ~ 8 : YM321
   - IC9 ~ 12 : YM322
   - IC13 ~ 16 : YM344
   - IC17, 20 : YM34501
   - IC18, 19 : YM34502
   - IC21, 22 : YM316
   - IC23 : YM327
   - IC24 : μPC610D
   - IC25 : TC4051P
   - IC26 : TC4016P
5. Diodes
   - D1 ~ 10 : 1S2473VE
6. Resistor
   - B marked : 0.1%
   - * marked : Flame proof carbon film resistor
   - R1 : Resistor 27K x 12
   - R2 : Resistor 10K x 12

(Notes)

1. Circuit Board : LC86060 [1]
2. Transistors
   - Tr1 ~ 3 : 2SC752 (O, Y)
   - Tr4 : 2SC458 (C, D)
3. IC
   - IC1, 2 : HD7400
   - IC4 : TC4009UBP
   - IC5 : HD7404P
   - IC6, 7 : HD7417P
   - IC8, 9 : SN75366N
   - IC11 : YM312
   - IC12 : YM320
   - IC13 : YM311
4. Diodes
   - D1 ~ 8 : 1S2473VE
   - D9 ~ 11 : 10E-1
5. Resistor
   - R1, 2 : Resistor 470K x 12
   - R3 : Resistor 4.7K x 12
   - R4 : Resistor 100K x 10
6. Connector
   - C1, 8 : NH Connector 5P (T, E)
   - C3 : NH Connector 10P (T, E)
   - C4 : NH Connector 8P (T, E)
   - C5, 6 : NH Connector 12P (T, E)
   - C7 : Connector 6P (T, E) 3.96 mm
   - C8 : NH Connector 3P (T, E)
   - CN1 : Flat cable connector 20P (T, E)
   - CN2, 3 : Flat cable connector 30P (T, E)

GS1

C1

Pin No.	Pin Name	Wire Color	Destination
1	Vss	BL	DET-Vss (C1-3)
2	V1B	RE	A-PC0 (C7-2)
3	IC	OR	A-IC (C5-2)
4			
5			

C2

Pin No.	Pin Name	Wire Color	Destination
1	φ2	–	–
2	16Y16	–	–
3	SCH	–	–
4	KCO	–	–
5	KCI	–	–
6	–12	–	–

C3

Pin No.	Pin Name	Wire Color	Destination
1	PS1	–	–
2	PS2	RE	TET-TRS (C1-3)
3	DP1	OR	DET-SD1 (C1-2)
4	DP2	–	–
5	DP3	GR	DET-SD2 (C1-1)
6	RP1	BE	DET-RD1 (C1-4)
7	RP2	VI	DET-RD2 (C1-5)
8	RP3	–	–
9	DAMP	WH	CNB-DAMP (C6-6)
10			

C4

Pin No.	Pin Name	Wire Color	Destination
1	L7	S GR	MK2-L7 (C4-2)
2	L6	S RE	MK2-L6 (C4-4)
3	L5	S OR	MK2-L5 (C4-6)
4	L4	S YE	MK2-L4 (C1-8)
5	L3	S GR	MK1-L3 (C6-2)
6	L2	S BE	MK1-L2 (C6-4)
7	L1	S VI	MK1-L1 (C1-1)
8	L0	S GY	MK1-L0 (C1-4)

C5

Pin No.	Pin Name	Wire Color	Destination
1	C # 2	S BR	MK1-C # 2 (C2-12)
2	C # 1	S RE	MK1-C # 1 (C2-9)
3	D2	S OR	MK1-D2 (C2-8)
4	D1	S YE	MK1-D1 (C2-5)
5	D # 2	S GR	MK1-D # 2 (C2-4)
6	D # 1	S BE	MK1-D # 1 (C2-1)
7	E2	S VI	MK1-E2 (C3-12)
8	E1	S GY	MK1-E1 (C3-9)
9	F2	S WH	MK1-F2 (C3-8)
10	F1	S GG	MK1-F1 (C3-5)
11	F # 2	S SB	MK1-F # 2 (C3-4)
12	F # 1	S PK	MK1-F # 1 (C3-1)

C6

Pin No.	Pin Name	Wire Color	Destination
1	G2	S BR	MK1-G2 (C4-12)
2	G1	S RE	MK1-G1 (C4-9)
3	G # 2	S OR	MK1-G # 2 (C4-8)
4	G # 1	S YE	MK1-G # 1 (C4-5)
5	A2	S GR	MK1-A2 (C4-4)
6	A1	S BE	MK1-A1 (C4-1)
7	A # 2	S VI	MK1-A # 2 (C5-12)
8	A # 1	S GY	MK1-A # 1 (C5-9)
9	B2	S WH	MK1-B2 (C5-8)
10	B1	S GG	MK1-B1 (C5-5)
11	C2	S SB	MK1-C2 (C5-4)
12	C4	S PK	MK1-C1 (C5-1)

C7

Pin No.	Pin Name	Wire Color	Destination
1	–7	GR	DC- –7 (C7-1)
2	Vss	BL	DC-Vss (C7-2)
3	–12	BE	DC- –12 (C7-3)
4	–	–	–
5	E	BL	DC-E (C7-5)
6	+15	OR	DC-+15 (C7-6)

C8

Pin No.	Pin Name	Wire Color	Destination
1	–	–	–
2	E10	YE	FM1-E10 (C1-4)
3	E9	OR	FM1-E9 (C1-3)
4	E8	RE	FM1-E8 (C1-2)
5	E7	BR	FM1-E7 (C1-1)

GS2

C1

Pin No.	Pin Name	Wire Color	Destination
1	Vss	BL	EFF-Vss (C2-1)
2	V1B	RE	A-PC0 (C7-2)
3	IC	OR	A-IC (C5-2)
4	–	–	–
5	–	–	–

C2

Pin No.	Pin Name	Wire Color	Destination
1	φ2	–	–
2	16Y16	–	–
3	SCH	–	–
4	KCO	–	–
5	KCI	–	–
6	–12	–	–

C3

Pin No.	Pin Name	Wire Color	Destination
1	PS1	–	–
2	PS2	–	–
3	DP1	OR	EFF-DP1 (C2-2)
4	DP2	–	–
5	DP3	GR	EFF-DP3 (C2-3)
6	RP1	–	–
7	RP2	–	–
8	RP3	–	–
9	DAMP	WH	FC-P1-6 F/S4P-2
10	–	–	–

C4

Pin No.	Pin Name	Wire Color	Destination
1	L7	S BR	MK3-L7 (C4-2)
2	L6	S RE	MK3-L6 (C4-4)
3	L5	S OR	MK3-L5 (C4-6)
4	L4	S YE	MK3-L4 (C4-8)
5	L3	S GR	MK4-L3 (C6-2)
6	L2	S BE	MK4-L2 (C6-4)
7	L1	S VI	MK4-L1 (C1-1)
8	L0	–	–

C5

Pin No.	Pin Name	Wire Color	Destination
1	C♯2	S BR	MK4-C♯2 (C2-12)
2	C♯1	S RE	MK4-C♯1 (C2-9)
3	D2	S OR	MK4-D2 (C2-8)
4	D1	S YE	MK4-D1 (C2-5)
5	D♯2	S GR	MK4-D♯2 (C2-4)
6	D♯1	S BE	MK4-D♯1 (C2-1)
7	E2	S VI	MK4-E2 (C3-12)
8	E1	S GY	MK4-E1 (C3-9)
9	F2	S WH	MK4-F2 (C3-8)
10	F1	S GG	MK4-F1 (C3-5)
11	F♯2	S SB	MK4-F♯2 (C3-4)
12	F♯1	S PK	MK4-F♯1 (C3-1)

C6

Pin No.	Pin Name	Wire Color	Destination
1	G2	S BR	MK4-G2 (C4-12)
2	G1	S RE	MK4-G1 (C4-9)
3	G♯2	S OR	MK4-G♯2 (C4-8)
4	G♯1	S YE	MK4-G♯1 (C4-5)
5	A2	S GR	MK4-A2 (C4-4)
6	A1	S BE	MK4-A1 (C4-1)
7	A♯2	S VI	MK4-A♯2 (C5-12)
8	A♯1	S GY	MK4- A♯1 (C5-9)
9	B2	S WH	MK4-B2 (C5-8)
10	B1	S GG	MK4-B1 (C5-5)
11	C2	S SB	MK4-C2 (C5-4)
12	C1	S PK	MK4-C1 (C5-1)

C7

Pin No.	Pin Name	Wire Color	Destination
1	–7	GR	DC- –7 (C6-1)
2	Vss	BL	DC-Vss (C6-2)
3	–12	BE	DC- –12 (C6-3)
4	–	–	–
5	E	BL	DC-E (C6-5)
6	+15	OR	DC-+5 (C6-6)

C8

Pin No.	Pin Name	Wire Color	Destination
1	–	–	–
2	E10	YE	FM-E10 (C1-4)
3	E9	OR	FM-E9 (C1-3)
4	E8	RE	FM-E8 (C1-2)
5	E7	BR	FM-E7 (C1-1)

CN No.	CN Name	Destination
CN1	20P FLAT CABLE	(to RW-CN6)
CN2	30P FLAT CABLE	(to FM-CN1)
CN3	30P FLAT CABLE	(to FM-CN2)

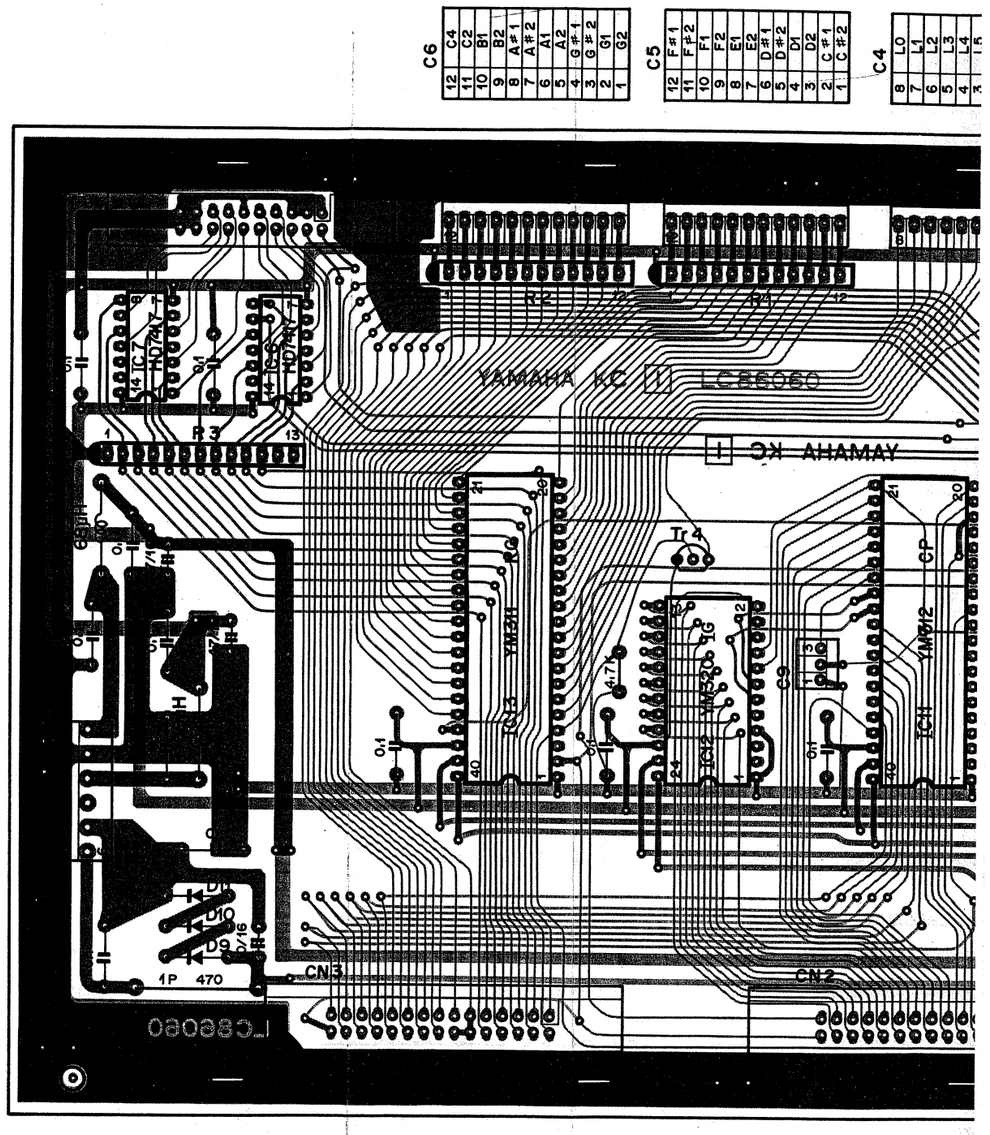

View from the component side of the circuit board

KC Circuit Board & Wiring

GS1

C4

Pin No.	Pin Name	Wire Color	Destination
1	L7	S GR	MK2-L7 (C4-2)
2	L6	S RE	MK2-L6 (C4-4)
3	L5	S OR	MK2-L5 (C4-6)
4	L4	S YE	MK2-L4 (C1-8)
5	L3	S GR	MK1-L3 (C6-2)
6	L2	S BE	MK1-L2 (C6-4)
7	L1	S VI	MK1-L1 (C1-1)
8	L0	S GY	MK1-L0 (C1-4)

C6

Pin No.	Pin Name	Wire Color	Destination
1	G2	S BR	MK1-G2 (C4-12)
2	G1	S RE	MK1-G1 (C4-9)
3	G # 2	S OR	MK1-G # 2 (C4-8)
4	G # 1	S YE	MK1-G # 1 (C4-5)
5	A2	S GR	MK1-A2 (C4-4)
6	A1	S BE	MK1-A1 (C4-1)
7	A # 2	S VI	MK1-A # 2 (C5-12)
8	A # 1	S GY	MK1-A # 1 (C5-9)
9	B2	S WH	MK1-B2 (C5-8)
10	B1	S GG	MK1-B1 (C5-5)
11	C2	S SB	MK1-C2 (C5-4)
12	C4	S PK	MK1-C1 (C5-1)

C5

Pin No.	Pin Name	Wire Color	Destination
1	C # 2	S BR	MK1-C # 2 (C2-12)
2	C # 1	S RE	MK1-C # 1 (C2-9)
3	D2	S OR	MK1-D2 (C2-8)
4	D1	S YE	MK1-D1 (C2-5)
5	D # 2	S GR	MK1-D # 2 (C2-4)
6	D # 1	S BE	MK1-D # 1 (C2-1)
7	E2	S VI	MK1-E2 (C3-12)
8	E1	S GY	MK1-E1 (C3-9)
9	F2	S WH	MK1-F2 (C3-8)
10	F1	S GG	MK1-F1 (C3-5)
11	F # 2	S SB	MK1-F # 2 (C3-4)
12	F # 1	S PK	MK1-F # 1 (C3-1)

C7

Pin No.	Pin Name	Wire Color	Destination
1	–7	GR	DC- –7 (C7-1)
2	Vss	BL	DC-Vss (C7-2)
3	–12	BE	DC- –12 (C7-3)
4	–	–	–
5	E	BL	DC-E (C7-5)
6	+15	OR	DC-+15 (C7-6)

C8

Pin No.	Pin Name	Wire Color	Destination
1	–	–	–
2	E10	YE	FM1-E10 (C1-4)
3	E9	OR	FM1-E9 (C1-3)
4	E8	RE	FM1-E8 (C1-2)
5	E7	BR	FM1-E7 (C1-1)

GS2

C4

Pin No.	Pin Name	Wire Color	Destination
1	L7	S BR	MK3-L7 (C4-2)
2	L6	S RE	MK3-L6 (C4-4)
3	L5	S OR	MK3-L5 (C4-6)
4	L4	S YE	MK3-L4 (C4-8)
5	L3	S GR	MK4-L3 (C6-2)
6	L2	S BE	MK4-L2 (C6-4)
7	L1	S VI	MK4-L1 (C1-1)
8	L0	–	–

C6

Pin No.	Pin Name	Wire Color	Destination
1	G2	S BR	MK4-G2 (C4-12)
2	G1	S RE	MK4-G1 (C4-9)
3	G≠2	S OR	MK4-G≠2 (C4-8)
4	G≠1	S YE	MK4-G≠1 (C4-5)
5	A2	S GR	MK4-A2 (C4-4)
6	A1	S BE	MK4-A1 (C4-1)
7	A≠2	S VI	MK4-A≠2 (C5-12)
8	A≠1	S GY	MK4- A≠1 (C5-9)
9	B2	S WH	MK4-B2 (C5-8)
10	B1	S GG	MK4-B1 (C5-5)
11	C2	S SB	MK4-C2 (C5-4)
12	C1	S PK	MK4-C1 (C5-1)

C5

Pin No.	Pin Name	Wire Color	Destination
1	C≠2	S BR	MK4-C≠2 (C2-12)
2	C≠1	S RE	MK4-C≠1 (C2-9)
3	D2	S OR	MK4-D2 (C2-8)
4	D1	S YE	MK4-D1 (C2-5)
5	D≠2	S GR	MK4-D≠2 (C2-4)
6	D≠1	S BE	MK4-D≠1 (C2-1)
7	E2	S VI	MK4-E2 (C3-12)
8	E1	S GY	MK4-E1 (C3-9)
9	F2	S WH	MK4-F2 (C3-8)
10	F1	S GG	MK4-F1 (C3-5)
11	F≠2	S SB	MK4-F≠2 (C3-4)
12	F≠1	S PK	MK4-F≠1 (C3-1)

C7

Pin No.	Pin Name	Wire Color	Destination
1	–7	GR	DC- –7 (C6-1)
2	Vss	BL	DC-Vss (C6-2)
3	–12	BE	DC- –12 (C6-3)
4	–	–	–
5	E	BL	DC-E (C6-5)
6	+15	OR	DC-+5 (C6-6)

C8

Pin No.	Pin Name	Wire Color	Destination
1	–	–	–
2	E10	YE	FM-E10 (C1-4)
3	E9	OR	FM-E9 (C1-3)
4	E8	RE	FM-E8 (C1-2)
5	E7	BR	FM-E7 (C1-1)

CN No.	CN Name	Destination
CN1	20P FLAT CABLE	(to RW-CN6)
CN2	30P FLAT CABLE	(to FM-CN1)
CN3	30P FLAT CABLE	(to FM-CN2)

C6

12	C4
11	C2
10	B1
9	B2
8	A≠1
7	A≠2
6	A1
5	A2
4	G≠1
3	G≠2
2	G1
1	G2

C5

12	F≠1
11	F≠2
10	F1
9	F2
8	E1
7	E2
6	D≠1
5	D≠2
4	D1
3	D2
2	C≠1
1	C≠2

C4

8	L0
7	L1
6	L2
5	L3
4	L4
3	L5
2	L6
1	L7

C3

10	
9	DAMP
8	RP3
7	RP2
6	RP1
5	DP3
4	DP2
3	DP1
2	PS2
1	PS1

C1

5	
4	
3	IC
2	VIB
1	Vss

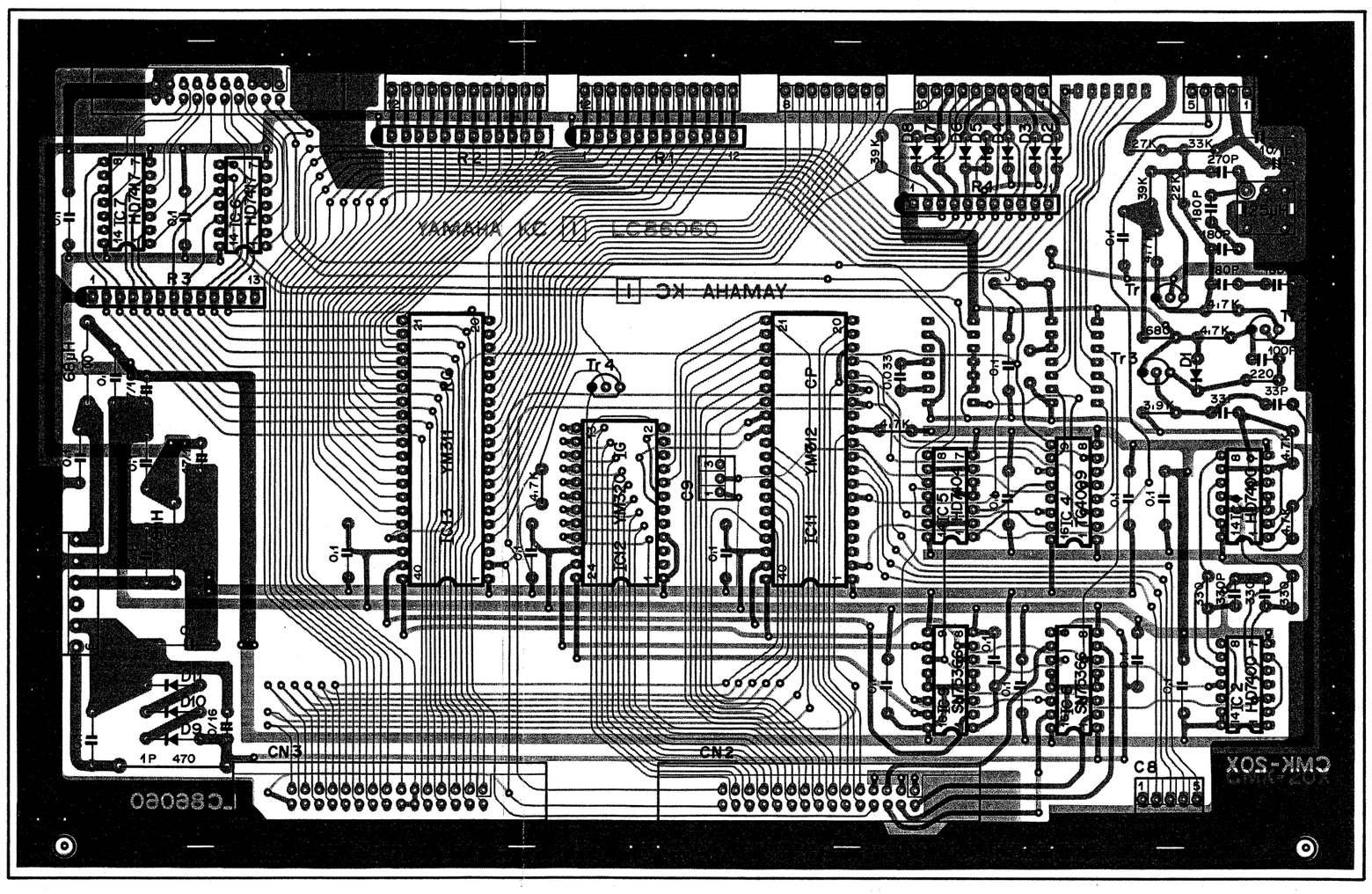

C7

–7	1
Vss	2
–12	3
–	4
E	5
+15	6

C8

1	2	3	4	5
–	E10	E9	E8	E7

View from the component side of the circuit board

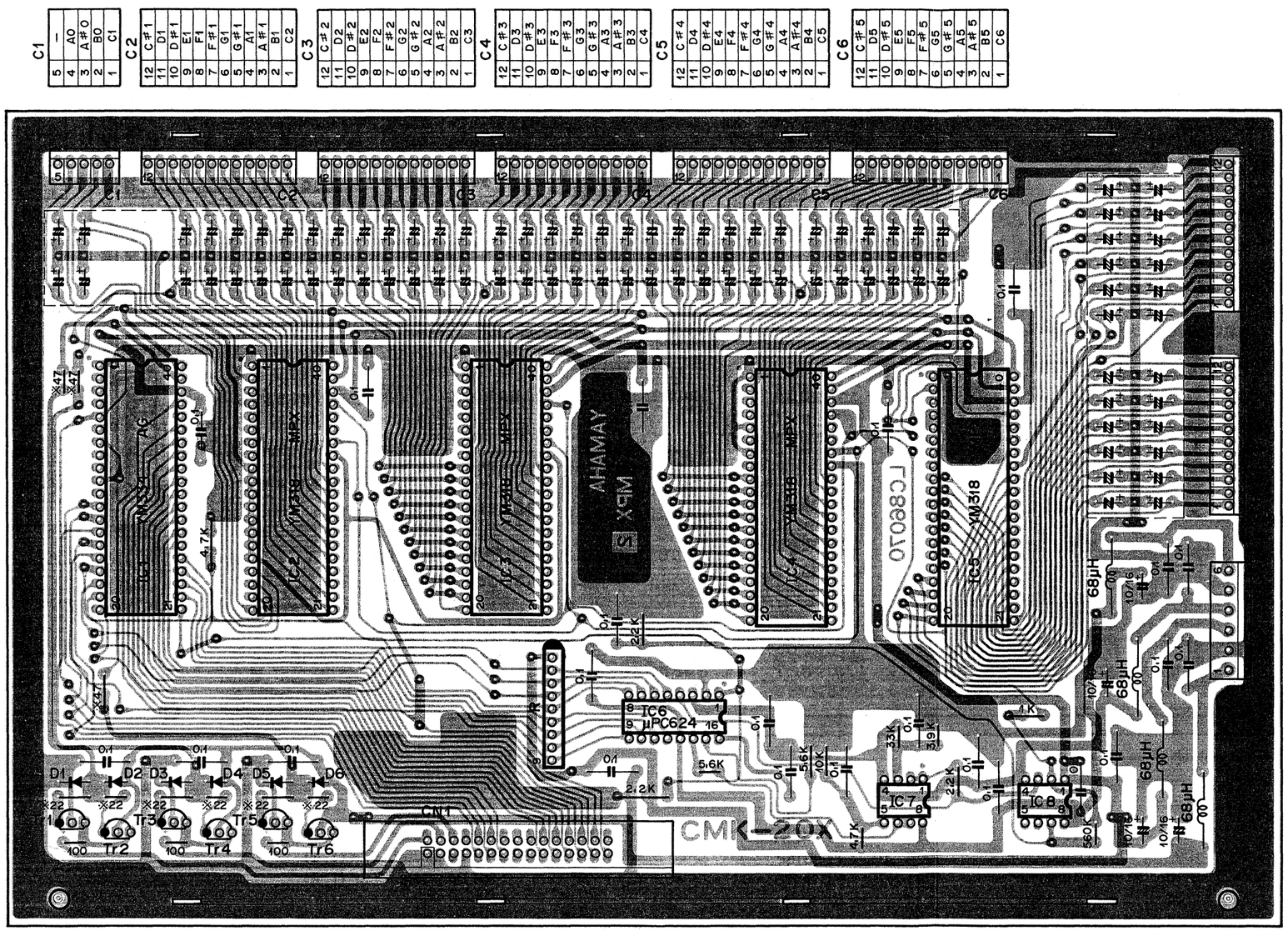

View from the component side of the circuit board

C7

12	C#6
11	D6
10	D#6
9	E6
8	F6
7	F#6
6	G6
5	G#6
4	A6
3	A#6
2	B6
1	C7

C8

12	C#7
11	D7
10	D#7
9	E7
8	F7
7	F#7
6	G7
5	G#7
4	A7
3	A#7
2	B7
1	C8

C9

6	+15
5	E
4	−15
3	−12
2	Vss
1	−7

C1

Pin No.	Pin Name	Wire Color	Destination
1	C1	BR	PCB-C (C1-4)
2	BO	PK	PCB-B (C1-3)
3	A#O	SB	PCB-A# (C1-2)
4	AO	GG	PCB-A (C1-1)
5	—	—	—

C2

Pin No.	Pin Name	Wire Color	Destination
1	C2	BR	PCA1-C (C3-5)
2	B1	PK	PCA1-B (C3-4)
3	A#1	SB	PCA1-A# (C3-3)
4	A1	GG	PCA1-A (C3-2)
5	G#1	WH	PCA1-G# (C3-1)
6	G1	GY	PCA1-G (C1-7)
7	F#1	VI	PCA1-F# (C1-6)
8	F1	BE	PCA1-F (C1-5)
9	E1	GR	PCA1-E (C1-4)
10	D#1	YE	PCA1-D# (C1-3)
11	D1	OR	PCA1-D (C1-2)
12	C#1	RE	PCA1-C# (C1-1)

C3

Pin No.	Pin Name	Wire Color	Destination
1	C3	BR	PCA2-C (C3-5)
2	B2	PK	PCA2-B (C3-4)
3	A#2	SB	PCA2-A# (C3-3)
4	A2	GG	PCA2-A (C3-2)
5	G#2	WH	PCA2-G# (C3-1)
6	G2	GY	PCA2-G (C1-7)
7	F#2	VI	PCA2-F# (C1-6)
8	F2	BE	PCA2-F (C1-5)
9	E2	GR	PCA2-E (C1-4)
10	D#2	YE	PCA2-D# (C1-3)
11	D2	OR	PCA2-D (C1-2)
12	C#2	RE	PCA2-C# (C1-1)

C4

Pin No.	Pin Name	Wire Color	Destination
1	C4	BR	PCA3-C (C3-5)
2	B3	PK	PCA3-B (C3-4)
3	A#3	SB	PCA3-A# (C3-3)
4	A3	GG	PCA3-A (C3-2)
5	G#3	WH	PCA3-G# (C3-1)
6	G3	GY	PCA3-G (C1-7)
7	F#3	VI	PCA3-F# (C1-6)
8	F3	BE	PCA3-F (C1-5)
9	E3	GR	PCA3-E (1-4)
10	D#3	YE	PCA3-D# (C1-3)
11	D3	OR	PCA3-D (C1-2)
12	C#3	RE	PCA3-C# (C1-1)

C5

Pin No.	Pin Name	Wire Color	Destination
1	C5	BR	PCA4-C (C3-5)
2	B4	PK	PCA4-B (C3-4)
3	A#4	SB	PCA4-A# (C3-3)
4	A4	GG	PCA4-A (C3-2)
5	G#4	WH	PCA4-G# (C3-1)
6	G4	GY	PCA4-G (C1-7)
7	F#4	VI	PCA4-F# (C1-6)
8	F4	BE	PCA4-E (C1-5)
9	E4	GR	PCA4-E (C1-4)
10	D#4	YE	PCA4-D# (C1-3)
11	D4	OR	PCA4-D (C1-2)
12	C#4	RE	PCA4-C# (C1-1)

C6

Pin No.	Pin Name	Wire Color	Destination
1	C6	BR	PCA5-C (C3-5)
2	B5	PK	PCA5-B (C3-4)
3	A#5	SB	PCA5-A# (C3-3)
4	A5	GG	PCA5-A (C3-2)
5	G#5	WH	PCA5-G# (C3-1)
6	G5	GY	PCA5-G (C1-7)
7	F#5	VI	PCA5-F# (C1-6)
8	F5	BE	PCA5-F (C1-5)
9	E5	GR	PCA5-E (C1-4)
10	D#5	YE	PCA5-D# (C1-3)
11	D5	OR	PCA5-D (C1-2)
12	C#5	RE	PCA5-C# (C1-1)

C7

Pin No.	Pin Name	Wire Color	Destination
1	C7	BR	PCA6-C (C3-5)
2	B6	PK	PCA6-B (C3-4)
3	A#6	SB	PCA6-A# (C3-3)
4	A6	GG	PCA6-A (C3-2)
5	G#6	WH	PCA6-G# (C3-1)
6	G6	GY	PCA6-G (C1-7)
7	F#6	VI	PCA6-F# (C1-6)
8	F6	BE	PCA6-F (C1-5)
9	E6	GR	PCA6-E (C1-4)
10	D#6	YE	PCA6-D# (C1-3)
11	D6	OR	PCA6-D (C1-2)
12	C#6	RE	PCA6-C# (C1-1)

C8

Pin No.	Pin Name	Wire Color	Destination
1	C8	BR	PCA7-C (C3-5)
2	B7	PK	PCA7-B (C3-4)
3	A#7	SB	PCA7-A# (C3 3)
4	A7	GG	PCA7-A (C3-2)
5	G#7	WH	PCA7 (G# (C3-1)
6	G7	GY	PCA7-G (C1-7)
7	F#7	VI	PCA7-F# (C1-6)
8	F7	BE	PCA7-F (C1-5)
9	E7	GR	PCA7-E (C1-4)
10	D#7	YE	PCA7-D# (C1-3)
11	D7	OR	PCA7-D (C1-2)
12	C#7	RE	PCA7-C# (C1-1)

C9

Pin No.	Pin Name	Wire Color	Destination
1	−7	GR	DC-−7 (C4-1)
2	Vss	BL	DC-Vss (C4-2)
3	−12	BE	DC-−12 (C4-3)
4	−15	BR	DC-−15 (C4-4)
5	E	BL	DC-E (C4-5)
6	+15	OR	DC-+15 (C4-6)

(Notes)

1. Circuit Board :
2. Transistors
   Tr1, 3, 5 : 2S
   Tr2, 4, 6 : 2S
3. IC
   IC1 : YI
   IC2 ~ 5 : YI
   IC6 : µF
   IC7 : N.
   IC8 : µF
4. Diodes
   D1 ~ 6 : 1S
5. Resistor
   R marked : Re
   * marked : FI

MPX Circuit Board & Wiring

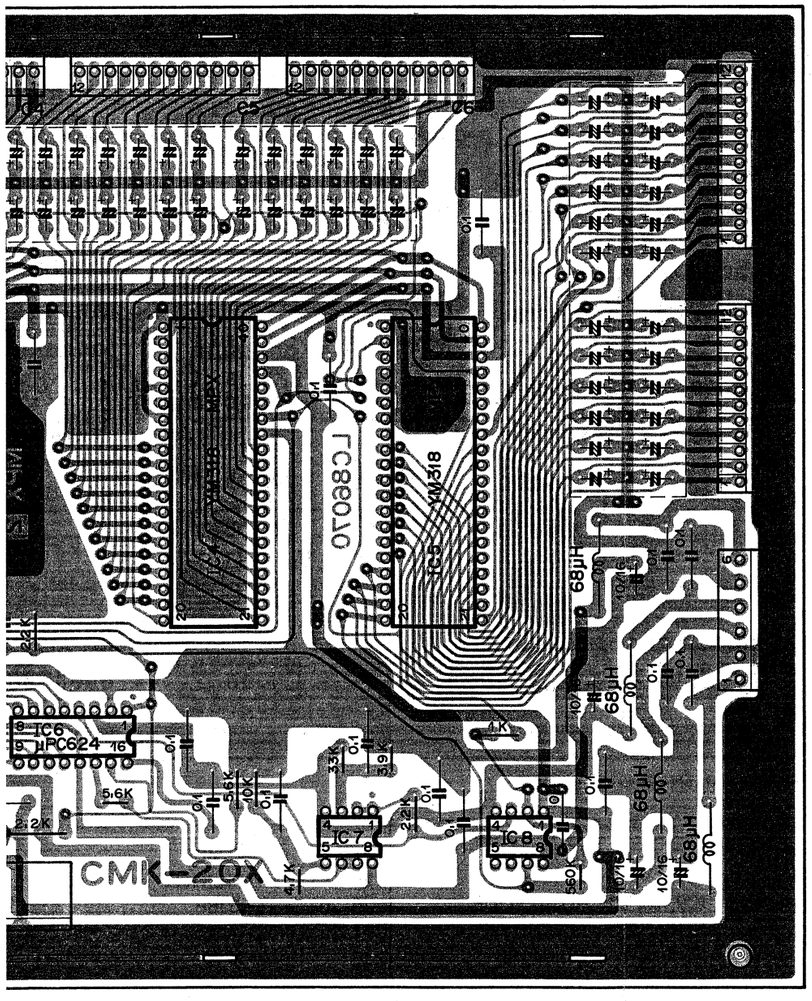

C5	
12	C#4
11	D4
10	D#4
9	E4
8	F4
7	F#4
6	G4
5	G#4
4	A4
3	A#4
2	B4
1	C5

C6	
12	C#5
11	D5
10	D#5
9	E5
8	F5
7	F#5
6	G5
5	G#5
4	A5
3	A#5
2	B5
1	C6

C7	
12	C#6
11	D6
10	D#6
9	E6
8	F6
7	F#6
6	G6
5	G#6
4	A6
3	A#6
2	B6
1	C7

C8	
12	C#7
11	D7
10	D#7
9	E7
8	F7
7	F#7
6	G7
5	G#7
4	A7
3	A#7
2	B7
1	C8

C9	
6	+15
5	E
4	−15
3	−12
2	Vss
1	−7

C1

Pin No.	Pin Name	Wire Color	Destination
1	C1	BR	PCB-C (C1-4)
2	BO	PK	PCB-B (C1-3)
3	A#O	SB	PCB-A# (C1-2)
4	AO	GG	PCB-A (C1-1)
5	–	–	–

C2

Pin No.	Pin Name	Wire Color	Destination
1	C2	BR	PCA1-C (C3-5)
2	B1	PK	PCA1-B (C3-4)
3	A#1	SB	PCA1-A# (C3-3)
4	A1	GG	PCA1-A (C3-2)
5	G#1	WH	PCA1-G# (C3-1)
6	G1	GY	PCA1-G (C1-7)
7	F#1	VI	PCA1-F# (C1-6)
8	F1	BE	PCA1-F (C1-5)
9	E1	GR	PCA1-E (C1-4)
10	D#1	YE	PCA1-D# (C1-3)
11	D1	OR	PCA1-D (C1-2)
12	C#1	RE	PCA1-C# (C1-1)

C3

Pin No.	Pin Name	Wire Color	Destination
1	C3	BR	PCA2-C (C3-5)
2	B2	PK	PCA2-B (C3-4)
3	A#2	SB	PCA2-A# (C3-3)
4	A2	GG	PCA2-A (C3-2)
5	G#2	WH	PCA2-G# (C3-1)
6	G2	GY	PCA2-G (C1-7)
7	F#2	VI	PCA2-F# (C1-6)
8	F2	BE	PCA2-F (C1-5)
9	E2	GR	PCA2-E (C1-4)
10	D#2	YE	PCA2-D# (C1-3)
11	D2	OR	PCA2-D (C1-2)
12	C#2	RE	PCA2-C# (C1-1)

C4

Pin No.	Pin Name	Wire Color	Destination
1	C4	BR	PCA3-C (C3-5)
2	B3	PK	PCA3-B (C3-4)
3	A#3	SB	PCA3-A# (C3-3)
4	A3	GG	PCA3-A (C3-2)
5	G#3	WH	PCA3-G# (C3-1)
6	G3	GY	PCA3-G (C1-7)
7	F#3	VI	PCA3-F# (C1-6)
8	F3	BE	PCA3-F (C1-5)
9	E3	GR	PCA3-E (1-4)
10	D#3	YE	PCA3-D# (C1-3)
11	D3	OR	PCA3-D (C1-2)
12	C#3	RE	PCA3-C# (C1-1)

C5

Pin No.	Pin Name	Wire Color	Destination
1	C5	BR	PCA4-C (C3-5)
2	B4	PK	PCA4-B (C3-4)
3	A#4	SB	PCA4-A# (C3-3)
4	A4	GG	PCA4-A (C3-2)
5	G#4	WH	PCA4-G# (C3-1)
6	G4	GY	PCA4-G (C1-7)
7	F#4	VI	PCA4-F# (C1-6)
8	F4	BE	PCA4-F (C1-5)
9	E4	GR	PCA4-E (C1-4)
10	D#4	YE	PCA4-D# (C1-3)
11	D4	OR	PCA4-D (C1-2)
12	C#4	RE	PCA4-C# (C1-1)

C6

Pin No.	Pin Name	Wire Color	Destination
1	C6	BR	PCA5-C (C3-5)
2	B5	PK	PCA5-B (C3-4)
3	A#5	SB	PCA5-A# (C3-3)
4	A5	GG	PCA5-A (C3-2)
5	G#5	WH	PCA5-G# (C3-1)
6	G5	GY	PCA5-G (C1-7)
7	F#5	VI	PCA5-F# (C1-6)
8	F5	BE	PCA5-F (C1-5)
9	E5	GR	PCA5-E (C1-4)
10	D#5	YE	PCA5-D# (C1-3)
11	D5	OR	PCA5-D (C1-2)
12	C#5	RE	PCA5-C# (C1-1)

C7

Pin No.	Pin Name	Wire Color	Destination
1	C7	BR	PCA6-C (C3-5)
2	B6	PK	PCA6-B (C3-4)
3	A#6	SB	PCA6-A# (C3-3)
4	A6	GG	PCA6-A (C3-2)
5	G#6	WH	PCA6-G# (C3-1)
6	G6	GY	PCA6-G (C1-7)
7	F#6	VI	PCA6-F# (C1-6)
8	F6	BE	PCA6-F (C1-5)
9	E6	GR	PCA6-E (C1-4)
10	D#6	YE	PCA6-D# (C1-3)
11	D6	OR	PCA6-D (C1-2)
12	C#6	RE	PCA6-C# (C1-1)

C8

Pin No.	Pin Name	Wire Color	Destination
1	C8	BR	PCA7-C (C3-5)
2	B7	PK	PCA7-B (C3-4)
3	A#7	SB	PCA7-A# (C3 3)
4	A7	GG	PCA7-A (C3-2)
5	G#7	WH	PCA7 (G# (C3-1)
6	G7	GY	PCA7-G (C1-7)
7	F#7	VI	PCA7-F# (C1-6)
8	F7	BE	PCA7-F (C1-5)
9	E7	GR	PCA7-E (C1-4)
10	D#7	YE	PCA7-D# (C1-3)
11	D7	OR	PCA7-D (C1-2)
12	C#7	RE	PCA7-C# (C1-1)

C9

Pin No.	Pin Name	Wire Color	Destination
1	−7	GR	DC-−7 (C4-1)
2	Vss	BL	DC-Vss (C4-2)
3	−12	BE	DC-−12 (C4-3)
4	−15	BR	DC-−15 (C4-4)
5	E	BL	DC-E (C4-5)
6	+15	OR	DC-+15 (C4-6)

(Notes)

1. Circuit Board : LC86070 [2]
2. Transistors
   - Tr1, 3, 5 : 2SC1959 (O, Y)
   - Tr2, 4, 6 : 2SA1015 (Y)
3. IC
   - IC1 : YM334
   - IC2 ~ 5 : YM318
   - IC6 : µPC624
   - IC7 : NJM4558DV
   - IC8 : µPC311C
4. Diodes
   - D1 ~ 6 : 1S2473VE
5. Resistor
   - R marked : Resistor 4.7K x 8
   - * marked : Flame proof carbon film resistor.

GS1

C1

Pin No.	Pin Name	Wire Color	Destination
1	S1	BR	SELL-S1 (C1-8)
2	L1	RE	SELL-L1 (C1-7)
3	S2	OR	SELL-S2 (C1-6)
4	L2	YE	SELL-L2 (C1-5)
5	S3	GR	SELL-S3 (C1-4)
6	L3	BE	SELL-L3 (C1-3)
7	S4	VI	SELL-S4 (C1-2)
8	L4	GY	SELL-L4 (C1-1)
9	WRITE	WH	CNB-WRITE (C7-6)
10	–12	BE	CNB-–12 (C7-7)

C2

Pin No.	Pin Name	Wire Color	Destination
1	S5	BR	SELL-S5 (C2-10)
2	L5	RE	SELL-L5 (C2-9)
3	S6	OR	SELL-S6 (C2-8)
4	L6	YE	SELL-L6 (C2-7)
5	S7	GR	SELL-S7 (C2-6)
6	L7	BE	SELL-L7 (C2-5)
7	S8	VI	SELL-S8 (C2-4)
8	L8	GY	SELL-L8 (C2-3)
9	STO	GG	SELL-STO (C2-2)
10	Vss	BL	SELL-Vss (C2-1)

C3

Pin No.	Pin Name	Wire Color	Destination
1	S1	BR	SELR-S1 (C1-8)
2	L9	RE	SELR-L9 (C1-7)
3	S2	OR	SELR-S2 (C1-6)
4	L10	YE	SELR-L10 (C1-5)
5	S3	GR	SELR-S3 (C1-4)
6	L11	BE	SELR-L11 (C1-3)
7	S4	VI	SELR-S4 (C1-2)
8	L12	GY	SELR-L12 (C1-1)
9	PLK	SB	CNB-PLK (C7-8)
10	S1	BR	CNB-S1 (C7-9)

C4

Pin No.	Pin Name	Wire Color	Destination
1	S5	BR	SELR-S5 (C2-8)
2	L13	RE	SELR-L13 (C12-7)
3	S6	OR	SELR-S6 (C2-6)
4	L14	YE	SELR-L14 (C2-5)
5	S7	GR	SELR-S7 (C2-4)
6	L15	BE	SELR-L15 (C2-3)
7	S8	VI	SELR-S8 (C2-2)
8	L16	GY	SELR-L16 (C2-1)
9	ST1	PK	SELR-ST1 (C1-9)
10	Vss	BL	SELR-Vss (C1-10)

C7

Pin No.	Pin Name	Wire Color	Destination
1	STRD	BR	LED-1
2	REV	RE	CR-REV (C1-1)
3	MSW	OR	CR-MSW (C1-6)
4	WPR	YE	CR-WPR (C1-5)
5	WEN	GR	CR-WEN (C1-3)
6	WDT	BE	CR-WDL (C1-4)
7	CLD	VI	CR-CLD (C1-7)
8	MON	GY	CR-MON (C1-8)
9	RCK	WH	CR-RCK (C1-9)
10	RDT	GG	CR-RDT (C1-10)
11	–7	GR	CR-+5V (C1-11)
12	–12	BE	CR-GND (C1-12)

C8

Pin No.	Pin Name	Wire Color	Destination
1	–7	GR	DC-–7 (C3-1)
2	Vss	BL	DC-Vss (C3-2)
3	–12	BE	DC-–12 (C3-3)
4			
5			
6			

C9

Pin No.	Pin Name	Wire Color	Destination
1	–12	BE	DC-–12 (C11-1)
2	PON	PK	DC-PON (C11-2)
3	–7B	VI	DC-–7B (C11-3)

GS2

C1

Pin No.	Pin Name	Wire Color	Destination
1	S1	BR	SELL-S1 (C2-2)
2	L1	RE	SELL-L1 (C2-1)
3	S2	OR	SELL-S2 (C2-4)
4	L2	YE	SELL-L2 (C2-3)
5	S3	GR	SELL-S3 (C2-6)
6	L3	BE	SELL-L3 (C2-5)
7	S4	VI	SELL-S4 (C2-8)
8	L4	GY	SELL-L4 (C2-7)
9	WRT	WH	STO-WRT (C1-1)
10	–12	BE	STO-–12 (C1-5)

C2

Pin No.	Pin Name	Wire Color	Destination
1	S5	BR	SELL-S5 (C3-4)
2	L5	RE	SELL-L5 (C3-3)
3	S6	OR	SELL-S6 (C3-6)
4	L6	YE	SELL-L6 (C3-5)
5	S7	GR	SELL-S7 (C3-8)
6	L7	BE	SELL-L7 (C3-7)
7	S8	VI	SELL-S8 (C3-10)
8	L8	GY	SELL-L8 (C3-9)
9	STO	GG	SELL-STO (C3-1)
10	Vss	–	–

C3

Pin No.	Pin Name	Wire Color	Destination
1	S1	BR	SELR-S1 (C1-4)
2	L9	RE	SELR-L9 (C1-3)
3	S2	OR	SELR-S2 (C1-6)
4	L10	YE	SELR-L10 (C1-5)
5	S3	GR	SELR-S3 (C1-8)
6	L11	BE	SELR-L11 (C1-7)
7	S4	VI	SELR-S4 (C1-10)
8	L12	GY	SELR-L12 (C1-9)
9	PLK	WH	LOCK SW-center terminal
10	S1	–	–

C4

Pin No.	Pin Name	Wire Color	Destination
1	S5	BR	SELR-S5 (C2-2)
2	L13	RE	SELR-L13 (C2-1)
3	S6	OR	SELR-S6 (C2-4)
4	L14	YE	SELR-L14 (C2-3)
5	S7	GR	SELR-S7 (C2-6)
6	L15	BE	SELR-L15 (C2-5)
7	S8	VI	SELR-S8 (C2-8)
8	L16	GY	SELR-L16 (C2-7)
9	ST1	PK	SELR-ST1 (C1-1)
10	Vss	–	–

C7

Pin No.	Pin Name	Wire Color	Destination
1	STRD	BR	STO-STRD (C1-4)
2	REV	RE	CR-REV (C1-1)
3	MSW	OR	CR-MSW (C1-6)
4	WPR	YE	CR-WPR (C1-5)
5	WEN	GR	CR-WEN (C1-3)
6	WDT	BE	CR-WDT (C1-4)
7	CLD	VI	CR-CLD (C1-7)
8	MON	GY	CR-MON (C1-8)
9	RCK	WH	CR-RCK (C1-9)
10	RDT	GG	CR-RDT (C1-10)
11	–7	GR	CR-+5V (V1-11)
12	–12	BE	CR-GND (C1-12)

C8

Pin No.	Pin Name	Wire Color	Destination
1	–7	GR	DC-–7 (C4-1)
2	Vss	BL	DC-Vss (C4-2)
3	–12	BE	DC-–12 (C4-3)
4	–	–	–
5	–	–	–
6	–	–	–

C9

Pin No.	Pin Name	Wire Color	Destination
1	–12	BE	DC-–12 (C7-1)
2	PON	GR	DC-PON (C7-3)
3	–7B	VI	DC-–7B (C7-5)

CN No.	CN Name	Destination
CN5	26P FLAT CABLE	(to PGM UNIT 24P CONNECTOR)
CN6	20P FLAT CABLE	(to KC-CN1)

C7

12	–12
11	–7
10	RDT
9	RCK
8	MON
7	CLD
6	WDT
5	WEN
4	WPR
3	MSW
2	REV
1	STRD

C9

3	–7B
2	PON
1	–12

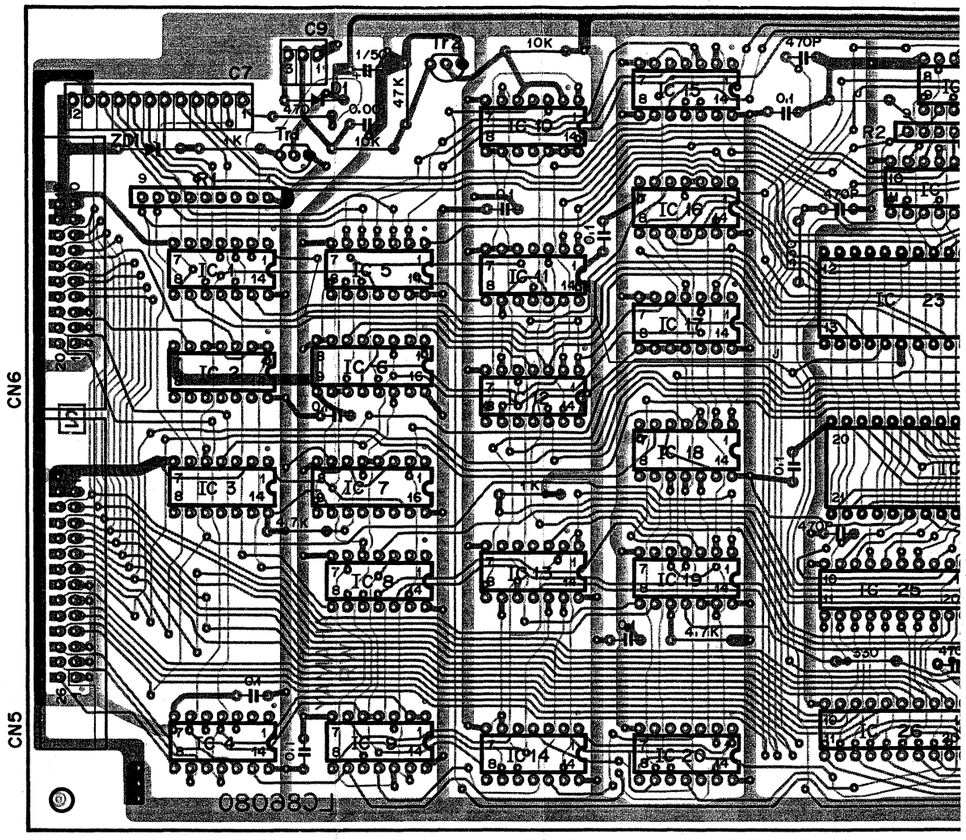

View from the component side of the circuit board

(Notes)

1. Circuit Board : LC86080 [2]
2. Transistors
   - Tr1 : 2SA509 (O, Y)
   - Tr2 : 2SC458 (C)
3. Diodes
   - D1 : 1N34A
   - ZD1 : RD3.6EB1
4. IC
   - IC1 : HD7416
   - IC2, 13 : HD74LSO8P
   - IC3 : TC4024BP
   - IC4, 8, 18 : HD74LSO4P
   - IC5, 12 : TC4069UBP
   - IC6 : TC4027BP
   - IC7 : TC40161BP
   - IC9, 16, 20 : HD74LSOOP
   - IC10 : TC40HO32P
   - IC11 : TC4011BP
   - IC14 : HC74LS20P
   - IC15, 17 : TC4013BP
   - IC19 : HD74LS74A
   - IC21 : HD74LS366
   - IC22 : HD74LS240P
   - IC23 : μPD8243
   - IC24 : μPD8035
   - IC25, 26 : SN72LS245
   - IC27 : TC4028BP
   - IC28 : HD74LS138P
   - IC29, 30 : TC5516P
   - IC31, 32 : HD74145
   - IC33 : MB8516
   - IC34 : SN74LS273
   - IC35, 36 : HD74LS161P
5. Capacitor
   - 0.1 : Ceramic capacitor
   - marked : Cerarock capacitor CSA6.00
6. Resistor
   - R1, 2, 3 : 4.7K x 8 (Resistor)
7.
8.

G	
G	

RW Circuit Board & Wiring

GS1

C3

Wire Color	Destination
BR	SELR-S1 (C1-8)
RE	SELR-L9 (C1-7)
OR	SELR-S2 (C1-6)
YE	SELR-L10 (C1-5)
GR	SELR-S3 (C1-4)
BE	SELR-L11 (C1-3)
VI	SELR-S4 (C1-2)
GY	SELR-L12 (C1-1)
SB	CNB-PLK (C7-8)
BR	CNB-S1 (C7-9)

C4

Wire Color	Destination
BR	SELR-S5 (C2-8)
RE	SELR-L13 (C12-7)
OR	SELR-S6 (C2-6)
YE	SELR-L14 (C2-5)
GR	SELR-S7 (C2-4)
BE	SELR-L15 (C2-3)
VI	SELR-S8 (C2-2)
GY	SELR-L16 (C2-1)
PK	SELR-ST1 (C1-9)
BL	SELR-Vss (C1-10)

C7

Pin No.	Pin Name	Wire Color	Destination
1	STRD	BR	LED-1
2	REV	RE	CR-REV (C1-1)
3	MSW	OR	CR-MSW (C1-6)
4	WPR	YE	CR-WPR (C1-5)
5	WEN	GR	CR-WEN (C1-3)
6	WDT	BE	CR-WDL (C1-4)
7	CLD	VI	CR-CLD (C1-7)
8	MON	GY	CR-MON (C1-8)
9	RCK	WH	CR-RCK (C1-9)
10	RDT	GG	CR-RDT (C1-10)
11	–7	GR	CR-+5V (C1-11)
12	–12	BE	CR-GND (C1-12)

C8

Pin No.	Pin Name	Wire Color	Destination
1	–7	GR	DC- –7 (C3-1)
2	Vss	BL	DC-Vss (C3-2)
3	–12	BE	DC- –12 (C3-3)
4			
5			
6			

C9

Pin No.	Pin Name	Wire Color	Destination
1	–12	BE	DC- –12 (C11-1)
2	PON	PK	DC-PON (C11-2)
3	–7B	VI	DC- –7B (C11-3)

GS2

C3

Wire Color	Destination
BR	SELR-S1 (C1-4)
RE	SELR-L9 (C1-3)
OR	SELR-S2 (C1-6)
YE	SELR-L10 (C1-5)
GR	SELR-S3 (C1-8)
BE	SELR-L11 (C1-7)
VI	SELR-S4 (C1-10)
GY	SELR-L12 (C1-9)
WH	LOCK SW-center terminal
–	–

C4

Wire Color	Destination
BR	SELR-S5 (C2-2)
RE	SELR-L13 (C2-1)
OR	SELR-S6 (C2-4)
YE	SELR-L14 (C2-3)
GR	SELR-S7 (C2-6)
BE	SELR-L15 (C2-5)
VI	SELR-S8 (C2-8)
GY	SELR-L16 (C2-7)
PK	SELR-ST1 (C1-1)
–	–

C7

Pin No.	Pin Name	Wire Color	Destination
1	STRD	BR	STO-STRD (C1-4)
2	REV	RE	CR-REV (C1-1)
3	MSW	OR	CR-MSW (C1-6)
4	WPR	YE	CR-WPR (C1-5)
5	WEN	GR	CR-WEN (C1-3)
6	WDT	BE	CR-WDT (C1-4)
7	CLD	VI	CR-CLD (C1-7)
8	MON	GY	CR-MON (C1-8)
9	RCK	WH	CR-RCK (C1-9)
10	RDT	GG	CR-RDT (C1-10)
11	–7	GR	CR-+5V (V1-11)
12	–12	BE	CR-GND (C1-12)

C8

Pin No.	Pin Name	Wire Color	Destination
1	–7	GR	DC- –7 (C4-1)
2	Vss	BL	DC-Vss (C4-2)
3	–12	BE	DC- –12 (C4-3)
4	–	–	–
5	–	–	–
6	–	–	–

C9

Pin No.	Pin Name	Wire Color	Destination
1	–12	BE	DC- –12 (C7-1)
2	PON	GR	DC-PON (C7-3)
3	–7B	VI	DC- –7B (C7-5)

CN No.	CN Name	Destination
CN5	26P FLAT CABLE	(to PGM UNIT 24P CONNECTOR)
CN6	20P FLAT CABLE	(to KC-CN1)

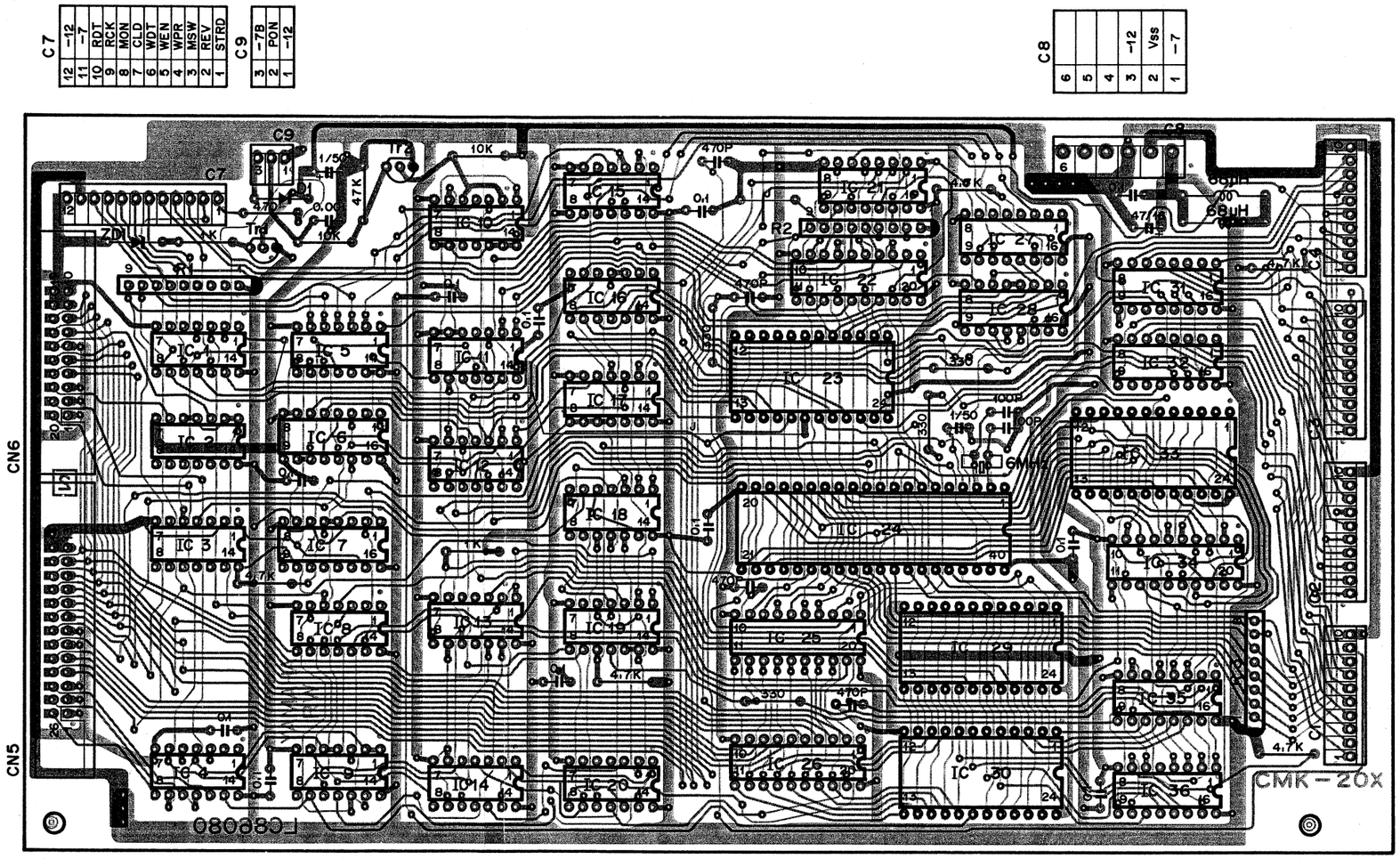

View from the component side of the circuit board

(Notes)

1. Circuit Board : LC86080 2
2. Transistors
   - Tr1 : 2SA509 (O, Y)
   - Tr2 : 2SC458 (C)
3. Diodes
   - D1 : 1N34A
   - ZD1 : RD3.6EB1
4. IC
   - IC1 : HD7416
   - IC2, 13 : HD74LSO8P
   - IC3 : TC4024BP
   - IC4, 8, 18 : HD74LSO4P
   - IC5, 12 : TC4069UBP
   - IC6 : TC4027BP
   - IC7 : TC40161BP
   - IC9, 16, 20 : HD74LSOOP
   - IC10 : TC40HO32P
   - IC11 : TC4011BP
   - IC14 : HC74LS20P
   - IC15, 17 : TC4013BP
   - IC19 : HD74LS74A
   - IC21 : HD74LS366
   - IC22 : HD74LS240P
   - IC23 : μPD8243
   - IC24 : μPD8035
   - IC25, 26 : SN72LS245
   - IC27 : TC4028BP
   - IC28 : HD74LS138P
   - IC29, 30 : TC5516P
   - IC31, 32 : HD74145
   - IC33 : MB8516
   - IC34 : SN74LS273
   - IC35, 36 : HD74LS161P
5. Capacitor
   - 0.1 : Ceramic capacitor
   - marked : Cerarock capacitor CSA6.00
6. Resistor
   - R1, 2, 3 : 4.7K x 8 (Resistor)
7. Connector
   - C1, 2, 3, 4 : NH Connector 10P (T, E)
   - C7 : NH Connector 12P (T, E)
   - C9 : NH Connector 3P (T, E)
   - CN5 : Header 26P
   - CN6 : Header 20P
   - C8 : 3.96 pitch 6P
8.

NA number	IC29	Jumper wire
GS1 NA80695	○	○
GS2 NA80742		

KEP-NA80695 ⚠
KEP-NA80742 ⚠

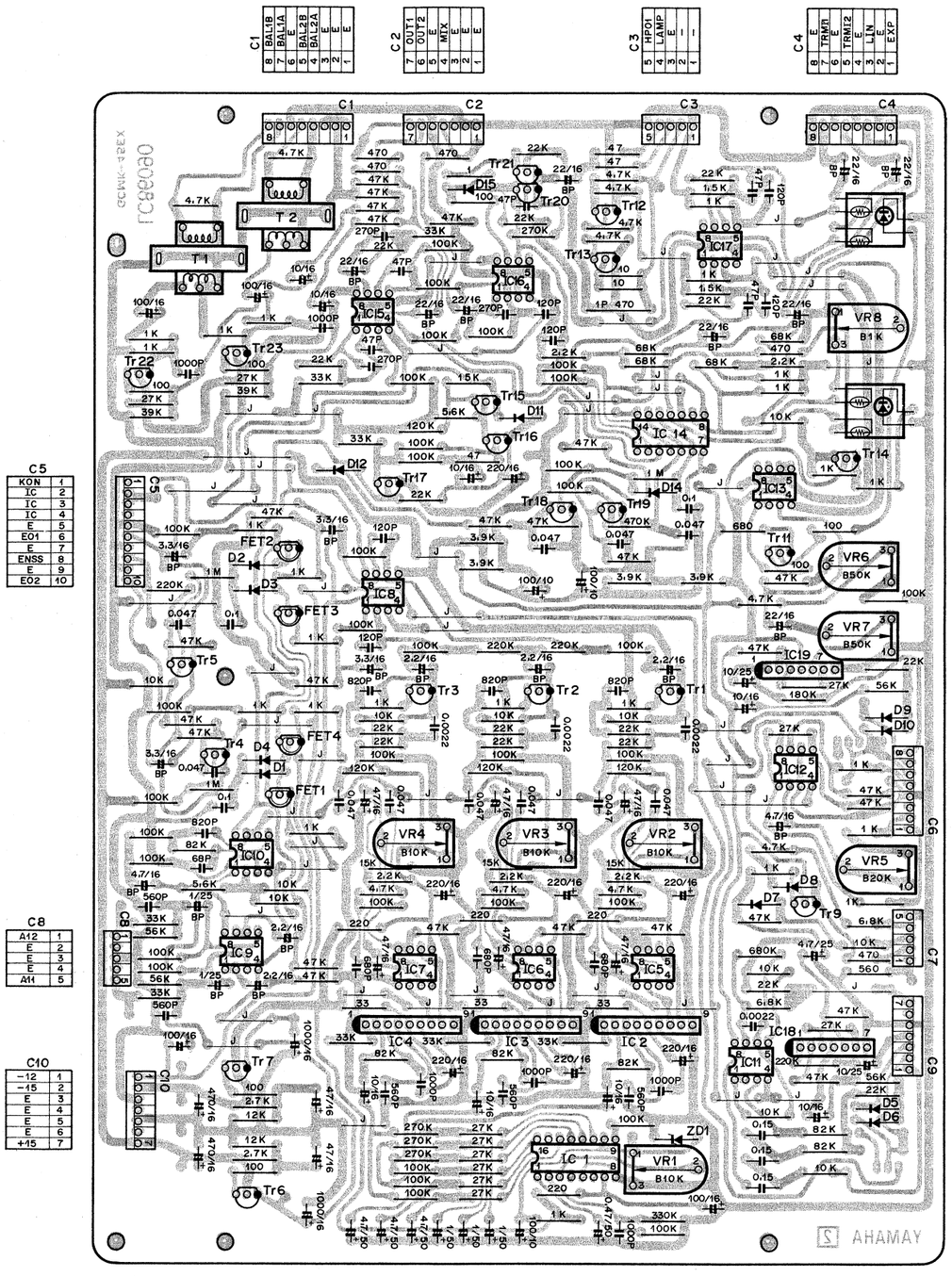

View from the component side of the circuit board

GS1

C1

Pin No.	Pin Name	Wire Color	Destination
1	E	S BE S	
2	E	S VI S	
3	E	S GY S	
4	BAL2A	S BE	CNP-BAL2A (C1-4)
5	BAL2B	S VI	CNP-BAL2B (C1-5)
6	E	S WH S	
7	BAL1A	S GY	CNP-BAL1A (C1-7)
8	BAL1B	S WH	CNP-BAL1B (C1-8)

C2

Pin No.	Pin Name	Wire Color	Destination
1	E	–	–
2	E	S OR S	–
3	E	S YE S	–
4	MIX	S OR	CNP-MIX (C2-4)
5	E	S GR S	–
6	OUT2	S YE	CNP-OUT2 (C2-6)
7	OUT1	S GR	CNP-OUT1 (C2-7)

C3

Pin No.	Pin Name	Wire Color	Destination
1	–	–	–
2	–	–	–
3	E	BL	CNX-E (C2-1)
4	LAMP	YE	CNX-LAMP (C2-2)
5	HPO1	BR	CNX-HPO1 (C2-3)
6	HPO2	RE	CNX-HPO2 (C2-4)
7	E	BL	CNX-E (C2-5)

C4

Pin No.	Pin Name	Wire Color	Destination
1	EXP	BE	CNB-EXP (C7-2)
2	E	–	–
3	LIN	VI	CNB-LIN (C7-1)
4	E	–	–
5	TRMI2	S BR	EQ-EQO2 (C2-5)
6	E	S BR S	
7	TRMI1	S RE	EQ-EQO1 (C2-2)
8	E	S RE S	

C5

Pin No.	Pin Name	Wire Color	Destination
1	KON	YE	–
2	IC	OR	KC-IC (C1-3)
3	IC	GY	CNB-IC (C6-5)
4	IC	–	–
5	E	–	–
6	EO1	S OR	EQ-EQI1 (C1-2)
7	E	S OR S	–
8	ENSS	GR	TET-ENS (C1-4)
9	E	S YE S	–
10	EO2	S YE	EQ-EQI2 (C1-1)

C6

Pin No.	Pin Name	Wire Color	Destination
1	TRMDO	RE	EFF-TDI (C2-2)
2	TRMSI	OR	EFF-TRO (C2-3)
3	–	–	–
4	E	–	–
5	TRMSO	YE	EFF-TSI (C2-4)
6	TRMPO	GR	CNB-TRM (C6-7)
7	TRMSW	BE	TET-TRM (C1-5)
8	TRMDI	BR	EFF-TDO (C2-1)

C7

Pin No.	Pin Name	Wire Color	Destination
1	PC3	GR	CNB-PC3 (C7-5)
2	PC0	RE	KC-VIB (C1-2)
3	PC2	OR	CNB-PC2 (C7-4)
4	PC1	YE	CNB-PC1 (C7-3)
5	E	BL	EFF-E (C1-4)

C8

Pin No.	Pin Name	Wire Color	Destination
1	AI2	S BE	FM2-AO (C3-4)
2	E	S BE S	FM2-E (C3-3)
3	E	–	–
4	E	S GR S	FM1-E (C3-3)
5	AI1	S GR	FM1-AO (C3-4)

C9

Pin No.	Pin Name	Wire Color	Destination
1	V1BSP	VI	EFF-VSI (C1-3)
2	V1BPD	GG	CNB-V1B (C6-8)
3	–	–	–
4	V1BDI	GR	EFF-VDO (C1-1)
5	E	–	–
6	–	–	–
7	V1BDO	BE	EFF-VDI (C1-2)

C10

Pin No.	Pin Name	Wire Color	Destination
1	–12	BE	CNB- –12 (C2-1)
2	–15	BR	CNB- –15 (C2-3)
3	E	–	–
4	E	–	–
5	E	–	–
6	E	BL	CNB-E (C2-5)
7	+15	OR	CNB-+15 (C2-7)

GS2

C1

Pin No.	Pin Name	Wire Color	Destination
1	E	S RE S	BAL2 OUT-PIN1
2	E	S OR S	BAL2 OUT-PIN1
3	E	S YE S	BAL1 OUT-PIN1
4	BAL2A	S RE	BAL2 OUT-PIN2
5	BAL2B	S OR	BAL2 OUT-PIN3
6	E	S GR S	BAL1 OUT-PIN1
7	BAL1A	S YE	BAL1 OUT-PIN2
8	BAL1B	S GR	BAL1 OUT-PIN3

C3

Pin No.	Pin Name	Wire Color	Destination
1	E	BL	MKL-EP
2	LAMP	YE	FC-P1-3 F/C-J-pin2
3	HPO1	BR	HP-P1-2 HP-J-R
4	HPO2	RE	HP-P1-1 HP-J-L
5	E	BL	HP-P1-3 HP-J-E

C4

Pin No.	Pin Name	Wire Color	Destination
1	EXP	BE	FC-P1-1 F/C-J-pin4
2	E	BL	FC-P1-2 F/C-J-pin3,8
3	LIN	VI	HP-P1-4 LINE SW Center Terminal
4	E	–	–
5	TRMI2	S BR	EQ-TRMI2 (C2-1)
6	E	S BR S	
7	TRMI1	S RE	EQ-TRMI1 (C2-4)
8	E	S RE S	

C5

Pin No.	Pin Name	Wire Color	Destination
1	–	–	–
2	IC	OR	KC-IC (C1-3)
3	IC	–	–
4	IC	–	–
5	E	–	–
6	EO1	S OR	EQ-EO1 (C1-4)
7	E	S OR S	
8	ENSS	GR	SELL-ENSS (C1-4)
9	E	S YE S	
10	EO2	S YE	EQ-EO2 (C1-5)

C6

Pin No.	Pin Name	Wire Color	Destination
1	TRMDO	RE	EFF-TRMDO (C4-4)
2	TRMSI	OR	EFF-TRMSI (C4-3)
3	–	–	–
4	E	–	–
5	TRMSO	YE	EFF-TRMSO (C4-2)
6	TRMPD	GR	FC-P1-7 F/S4P-3
7	TRMSW	BE	SELL-TRMSW (C1-1)
8	TRMDI	BR	EFF-TRMDI (C4-5)

C7

Pin No.	Pin Name	Wire Color	Destination
1	PC3	GR	EFF-PC3 (C1-2)
2	PC0	RE	KC-VIB (C1-2)
3	PC2	OR	EFF-PC2 (C1-3)
4	PC1	YE	EFF-PC1 (C1-4)
5	E	BL	EFF-E (C1-1)

C8

Pin No.	Pin Name	Wire Color	Destination
1	AI2	S BE	FM-AO (C3-5)
2	E	–	–
3	E	–	–
4	E	S GR S	FM-E (C3-2)
5	AI1	S GR	FM-AO (C3-4)

C9

Pin No.	Pin Name	Wire Color	Destination
1	VIBSP	VI	EFF-VIBSP (C3-3)
2	VIBPD	GG	FC-P1-8 F/S4P-4
3	–	–	–
4	VIBDI	GR	EFF-VIBDI (C3-5)
5	E	–	–
6	–	–	–
7	VIBDO	BE	EFF-VIBDO (C3-4)

C10

Pin No.	Pin Name	Wire Color	Destination
1	–12	BE	DC- –12 (C3-3)
2	–15	BR	DC- –15 (C3-4)
3	E	–	–
4	E	–	–
5	E	–	–
6	E	BL	DC-E (C3-5)
7	+15	OR	DC-+15 (C3-6)

(Notes)
1. Circuit B
2. Transistc
Tr1 ~ 3,
Tr4, 5, 9
Tr6, 13,
Tr7, 11,
Tr12
Tr20
Tr21
3. FET
FET1 ~
4. IC
IC1
IC2 ~ 4
IC5 ~ 7
IC8 ~ 13
IC14
IC18, 19
5. Diodes
D1 ~ 12,
6. Zener Di
ZD1
7. Connecto
C1, 4, 6
C2, 9, 10
C3, 7, 8
C5

A Circuit Board & Wiring

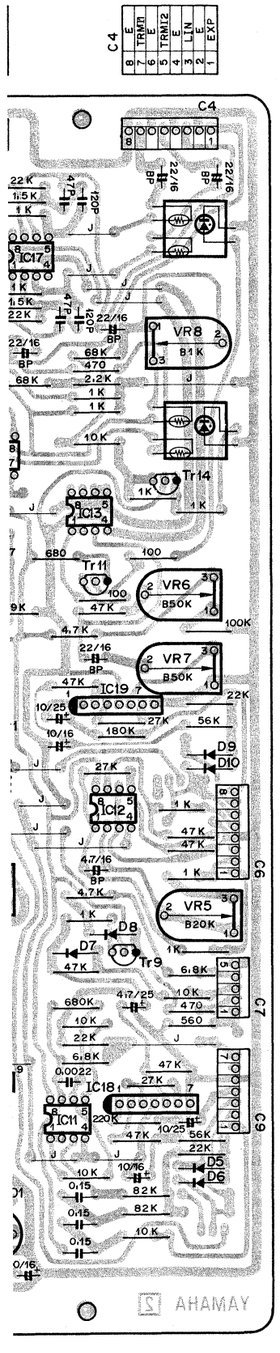

GS1

C1

Pin No.	Pin Name	Wire Color	Destination
1	E	S BE S	
2	E	S VI S	
3	E	S GY S	
4	BAL2A	S BE	CNP-BAL2A (C1-4)
5	BAL2B	S VI	CNP-BAL2B (C1-5)
6	E	S WH S	
7	BAL1A	S GY	CNP-BAL1A (C1-7)
8	BAL1B	S WH	CNP-BAL1B (C1-8)

C2

Pin No.	Pin Name	Wire Color	Destination
1	E	–	–
2	E	S OR S	–
3	E	S YE S	–
4	MIX	S OR	CNP-MIX (C2-4)
5	E	S GR S	–
6	OUT2	S YE	CNP-OUT2 (C2-6)
7	OUT1	S GR	CNP-OUT1 (C2-7)

C3

Pin No.	Pin Name	Wire Color	Destination
1	–	–	–
2	–	–	–
3	E	BL	CNX-E (C2-1)
4	LAMP	YE	CNX-LAMP (C2-2)
5	HPO1	BR	CNX-HPO1 (C2-3)
6	HPO2	RE	CNX-HPO2 (C2-4)
7	E	BL	CNX-E (C2-5)

C4

Pin No.	Pin Name	Wire Color	Destination
1	EXP	BE	CNB-EXP (C7-2)
2	E	–	–
3	LIN	VI	CNB-LIN (C7-1)
4	E	–	–
5	TRMI2	S BR	EQ-EQO2 (C2-5)
6	E	S BR S	
7	TRMI1	S RE	EQ-EQO1 (C2-2)
8	E	S RE S	

C5

Pin No.	Pin Name	Wire Color	Destination
1	KON	YE	–
2	IC	OR	KC-IC (C1-3)
3	IC	GY	CNB-IC (C6-5)
4	IC	–	–
5	E	–	–
6	EO1	S OR	EQ-EQI1 (C1-2)
7	E	S OR S	–
8	ENSS	GR	TET-ENS (C1-4)
9	E	S YE S	–
10	EO2	S YE	EQ-EQI2 (C1-1)

C6

Pin No.	Pin Name	Wire Color	Destination
1	TRMDO	RE	EFF-TDI (C2-2)
2	TRMSI	OR	EFF-TRO (C2-3)
3	–	–	–
4	E	–	–
5	TRMSO	YE	EFF-TSI (C2-4)
6	TRMPO	GR	CNB-TRM (C6-7)
7	TRMSW	BE	TET-TRM (C1-5)
8	TRMDI	BR	EFF-TDO (C2-1)

C7

Pin No.	Pin Name	Wire Color	Destination
1	PC3	GR	CNB-PC3 (C7-5)
2	PC0	RE	KC-VIB (C1-2)
3	PC2	OR	CNB-PC2 (C7-4)
4	PC1	YE	CNB-PC1 (C7-3)
5	E	BL	EFF-E (C1-4)

C8

Pin No.	Pin Name	Wire Color	Destination
1	AI2	S BE	FM2-AO (C3-4)
2	E	S BE S	FM2-E (C3-3)
3	E	–	–
4	E	S GR S	FM1-E (C3-3)
5	AI1	S GR	FM1-AO (C3-4)

C9

Pin No.	Pin Name	Wire Color	Destination
1	V1BSP	VI	EFF-VSI (C1-3)
2	V1BPD	GG	CNB-V1B (C6-8)
3	–	–	–
4	V1BDI	GR	EFF-VDO (C1-1)
5	E	–	–
6	–	–	–
7	V1BDO	BE	EFF-VDI (C1-2)

C10

Pin No.	Pin Name	Wire Color	Destination
1	–12	BE	CNB- –12 (C2-1)
2	–15	BR	CNB- –15 (C2-3)
3	E	–	–
4	E	–	–
5	E	–	–
6	E	BL	CNB-E (C2-5)
7	+15	OR	CNB-+15 (C2-7)

C6

8	TRMDI
7	TRMSW
6	TRMPO
5	TRMSO
4	E
3	–
2	TRMSI
1	TRMDO

C7

5	E
4	PC1
3	PC2
2	PC0
1	PC3

C9

7	V1BDO
6	–
5	E
4	V1BDI
3	–
2	V1BPD
1	V1BSP

GS2

C1

Pin No.	Pin Name	Wire Color	Destination
1	E	S RE S	BAL2 OUT-PIN1
2	E	S OR S	BAL2 OUT-PIN1
3	E	S YE S	BAL1 OUT-PIN1
4	BAL2A	S RE	BAL2 OUT-PIN2
5	BAL2B	S OR	BAL2 OUT-PIN3
6	E	S GR S	BAL1 OUT-PIN1
7	BAL1A	S YE	BAL1 OUT-PIN2
8	BAL1B	S GR	BAL1 OUT-PIN3

C3

Pin No.	Pin Name	Wire Color	Destination
1	E	BL	MKL-EP
2	LAMP	YE	FC-P1-3 F/C-J-pin2
3	HPO1	BR	HP-P1-2 HP-J-R
4	HPO2	RE	HP-P1-1 HP-J-L
5	E	BL	HP-P1-3 HP-J-E

C4

Pin No.	Pin Name	Wire Color	Destination
1	EXP	BE	FC-P1-1 F/C-J-pin4
2	E	BL	FC-P1-2 F/C-J-pin3,8
3	LIN	VI	HP-P1-4 LINE SW Center Terminal
4	E	–	–
5	TRMI2	S BR	EQ-TRMI2 (C2-1)
6	E	S BR S	
7	TRMI1	S RE	EQ-TRMI1 (C2-4)
8	E	S RE S	

C5

Pin No.	Pin Name	Wire Color	Destination
1	–	–	–
2	IC	OR	KC-IC (C1-3)
3	IC	–	–
4	IC	–	–
5	E	–	–
6	EO1	S OR	EQ-EO1 (C1-4)
7	E	S OR S	
8	ENSS	GR	SELL-ENSS (C1-4)
9	E	S YE S	
10	EO2	S YE	EQ-EO2 (C1-5)

C6

Pin No.	Pin Name	Wire Color	Destination
1	TRMDO	RE	EFF-TRMDO (C4-4)
2	TRMSI	OR	EFF-TRMSI (C4-3)
3	–	–	–
4	E	–	–
5	TRMSO	YE	EFF-TRMSO (C4-2)
6	TRMPD	GR	FC-P1-7 F/S4P-3
7	TRMSW	BE	SELL-TRMSW (C1-1)
8	TRMDI	BR	EFF-TRMDI (C4-5)

C7

Pin No.	Pin Name	Wire Color	Destination
1	PC3	GR	EFF-PC3 (C1-2)
2	PC0	RE	KC-VIB (C1-2)
3	PC2	OR	EFF-PC2 (C1-3)
4	PC1	YE	EFF-PC1 (C1-4)
5	E	BL	EFF-E (C1-1)

C8

Pin No.	Pin Name	Wire Color	Destination
1	AI2	S BE	FM-AO (C3-5)
2	E	–	–
3	E	–	–
4	E	S GR S	FM-E (C3-2)
5	AI1	S GR	FM-AO (C3-4)

C9

Pin No.	Pin Name	Wire Color	Destination
1	VIBSP	VI	EFF-VIBSP (C3-3)
2	VIBPD	GG	FC-P1-8 F/S4P-4
3	–	–	–
4	VIBDI	GR	EFF-VIBDI (C3-5)
5	E	–	–
6	–	–	–
7	VIBDO	BE	EFF-VIBDO (C3-4)

C10

Pin No.	Pin Name	Wire Color	Destination
1	–12	BE	DC- –12 (C3-3)
2	–15	BR	DC- –15 (C3-4)
3	E	–	–
4	E	–	–
5	E	–	–
6	E	BL	DC-E (C3-5)
7	+15	OR	DC-+15 (C3-6)

(Notes)

1. Circuit Board : LC86090 [2]
2. Transistors
   - Tr1 ~ 3, 22, 23 : 2SC458LG (C)
   - Tr4, 5, 9, 15, 18, 19 : 2SC458 (B, C)
   - Tr6, 13, 16 : 2SC509 (O, Y)
   - Tr7, 11, 14, 17 : 2SA509 (O, Y)
   - Tr12 : 2SA1015 (O, Y)
   - Tr20 : 2SC1212A (B, C)
   - Tr21 : 2SA743A (B, C)
3. FET
   - FET1 ~ 4 : 2SK105 (F)
4. IC
   - IC1 : YM633
   - IC2 ~ 4 : iG03290
   - IC5 ~ 7 : MN3009
   - IC8 ~ 13, 15 ~ 17 : NJM4558DV
   - IC14 : TC4016
   - IC18, 19 : iG02600
5. Diodes
   - D1 ~ 12, 14, 15 : 1S1555
6. Zener Diodes
   - ZD1 : WZ050
7. Connector
   - C1, 4, 6 : NH Connector 8P (T, E)
   - C2, 9, 10 : NH Connector 7P (T, E)
   - C3, 7, 8 : NH Connector 5P (T, E)
   - C5 : NH Connector 10P (T, E)

MK

View from the component side of the circuit board

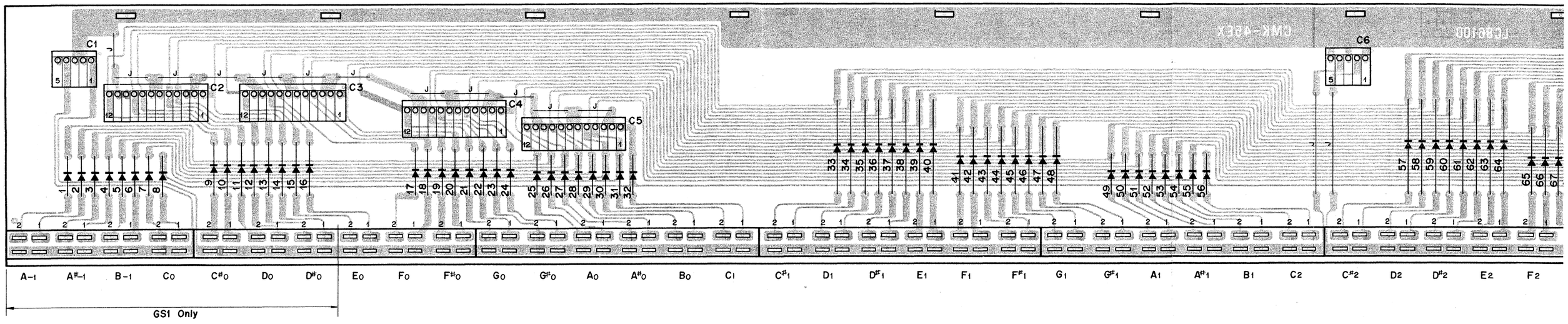

GS1

C1

Pin No.	Pin Name	Wire Color	Destination
1	L1	S VI	KC-L1 (C4-7)
2	Vss	S VI S	
3	Vss	S GY S	
4	LO	S GY	KC-LO (C4-8)

C2

Pin No.	Pin Name	Wire Color	Destination
1	D # 1	S BE	KC-D # 1 (C5-6)
2	Vss	S BE S	
3	Vss	S GR S	
4	D # 2	S GR	KC-D # 2 (C5-5)
5	D1	SYE	KC-D1 (C5-4)
6	Vss	S YE S	
7	Vss	S OR S	
8	D2	S OR	KC-D2 (C5-3)
9	C # 1	S RE	KC-C # 1 (C5-2)
10	Vss	S RE S	
11	Vss	SBR S	
12	C # 2	S BR	KC-C # 2 (C5-1)

C3

Pin No.	Pin Name	Wire Color	Destination
1	F # 1	S PK	KC-F # 1 (C5-12)
2	Vss	S PK S	
3	Vss	S SB S	
4	F # 2	S SB	KC-F # 2 (C5-11)
5	F1	S GG	KC-F1 (C5-10)
6	Vss	S GG S	
7	Vss	S WH S	
8	F2	S WH	KC-F2 (C5-9)
9	E1	S GY	KC-E1 (C5-8)
10	Vss	S GY S	
11	Vss	S VI S	
12	E2	S VI	KC-E2 (C5-7)

C4

Pin No.	Pin Name	Wire Color	Destination
1	A1	S BE	KC-A1 (C6-6)
2	Vss	S BE S	
3	Vss	S GR S	
4	A7	S GR	KC-A2 (C6-5)
5	G # 1	S YE	KC-G # 1 (C6-4)
6	Vss	S YE S	
7	Vss	S OR S	
8	G # 2	S OR	KC-G # 2 (C6-3)
9	G1	S RE	KC-G1 (C6-2)
10	Vss	S RE S	
11	Vss	S BR S	
12	G2	S BR	KC-G2 (C6-1)

C5

Pin No.	Pin Name	Wire Color	Destination
1	C1	S PK	KC-C1 (C6-12)
2	Vss	S PK S	
3	Vss	S SB S	
4	C2	S SB	KC-C2 (C6-11)
5	B1	S GG	KC-B1 (C6-10)
6	Vss	S GG S	
7	Vss	S WH S	
8	B2	S WH	KC-B2 (C6-9)
9	A # 1	S GY	KC-A # 1 (C6-8)
10	Vss	S GY S	
11	Vss	S VI S	
12	A # 2	S VI	KC-A # 2 (C6-7)

C6

Pin No.	Pin Name	Wire Color	Destination
1	Vss	–	–
2	L3	S GR	KC-L3 (C4-5)
3	Vss	S GR S	
4	L2	S BE	KC-L2 (C4-6)
5	Vss	S BE S	

C7

Pin No.	Pin Name	Wire Color	Destination
1	C1	BR	MK2-C1 (C3-1)
2	C2	RE	MK2-C2 (C3-2)
3	B1	OR	MK2-B1 (C3-3)
4	B2	YE	MK2-B2 (C3-4)
5	A # 1	GR	MK2-A # 1 (C3-5)
6	A # 2	BE	MK2-A # 2 (C3-6)
7	A1	VI	MK2-A1 (C3-7)
8	A2	GY	MK2-A2 (C3-8)
9	G # 1	WH	MK2-G # 1 (C3-9)
10	G # 2	GG	MK2-G # 2 (C3-10)
11	G1	SB	MK2-G1 (C3-11)
12	G2	PK	MK2-G2 (C3-12)

C8

Pin No.	Pin Name	Wire Color	Destination
1	F # 1	BR	MK2-F # 1 (C1-1)
2	F # 2	RE	MK2-F # 2 (C1-2)
3	F1	OR	MK2-F1 (C1-3)
4	F2	YE	MK2-F2 (C1-4)
5	E1	GR	MK2-E1 (C1-5)
6	E2	BE	MK2-E2 (C1-6)
7	D # 1	VI	MK2-D # 1 (C1-7)
8	D # 2	GY	MK2-D # 2 (C1-8)
9	D1	WH	MK2-D1 (C1-9)
10	D2	GG	MK2-D2 (C1-10)

C9

Pin No.	Pin Name	Wire Color	Destination
1	C # 1	SB	MK2-C # 1 (C2-1)
2	C # 2	PK	MK2-C # 2 (C2-2)
3	Vss	BL	MK2-Vss (C2-3)
4	Vss	BL	MK2-Vss (C2-4)
5	Vss	BL	DC-Vss (C1-2)

(Notes)
1. Circuit Board : LC86100 0
2. Diodes
   D1 ~ 80 : 1S1555
3. Connector
   C1, 6, 9 : 5P (T, E)
   C2 ~ 5, 7 : 12P (T, E)
   C8 : 10P (T, E)

KEP-NA80697-04 ⚠

GS2

C1

Pin No.	Pin Name	Wire Color	Destination
1	L1	S VI	KC-L1 (C4-7)
2	Vss	S VI S	
3	Vss	–	–
4	LO	–	–
5	–	–	–

C2

Pin No.	Pin Name	Wire Color	Destination
1	D♯1	S BE	KC-D♯1 (C5-6)
2	Vss	S BE S	
3	Vss	S GR S	
4	D♯2	S GR	KC-D♯2 (C5-5)
5	D1	S YE	KC-D1 (C5-4)
6	Vss	S YE S	
7	Vss	S OR S	
8	D2	S OR	KC-D2 (C5-3)
9	C♯1	S RE	KC-C♯1 (C5-2)
10	Vss	S RE S	
11	Vss	S BR S	
12	C♯2	S BR	KC-C♯2 (C5-1)

C3

Pin No.	Pin Name	Wire Color	Destination
1	F♯1	S PK	KC-F♯1 (C5-12)
2	Vss	S PK S	
3	Vss	S SB S	
4	F♯2	S SB	KC-F♯2 (C5-11)
5	F1	S GG	KC-F1 (C5-10)
6	Vss	S GG S	
7	Vss	S WH S	
8	F2	S WH	KC-F2 (C5-9)
9	E1	S GY	KC-E1 (C5-8)
10	Vss	S GY S	
11	Vss	S VI S	
12	E2	S VI	KC-E2 (C5-7)

C4

Pin No.	Pin Name	Wire Color	Destination
1	A1	S BE	KC-A1 (C6-6)
2	Vss	S BE S	
3	Vss	S GR S	
4	A2	S GR	KC-A2 (C6-5)
5	G♯1	S YE	KC-G♯1 (C6-4)
6	Vss	S YE S	
7	Vss	S OR S	
8	G♯2	S OR	KC-G♯2 (C6-3)
9	G1	S RE	KC-G1 (C6-2)
10	Vss	S RE S	
11	Vss	S BR S	
12	G2	S BR	KC-G2 (C6-1)

C5

Pin No.	Pin Name	Wire Color	Destination
1	C1	S PK	KC-C1 (C6-12)
2	Vss	S PK S	
3	Vss	S SB S	
4	C2	S SB	KC-C2 (C6-11)
5	B1	S GG	KC-B1 (C6-10)
6	Vss	S GG S	
7	Vss	S WH S	
8	B2	S WH	KC-B2 (C6-9)
9	A♯1	S GY	KC-A♯1 (C6-8)
10	Vss	S GY S	
11	Vss	S VI S	
12	A♯2	S VI	KC-A♯2 (C6-7)

C6

Pin No.	Pin Name	Wire Color	Destination
1	Vss	–	–
2	L3	S GR	KC-L3 (C4-5)
3	Vss	S GR S	
4	L2	S BE	KC-L2 (C4-6)
5	Vss	S BE S	

C7

Pin No.	Pin Name	Wire Color	Destination
1	C1	BR	MK3-C1 (C3-1)
2	C2	RE	MK3-C2 (C3-2)
3	B1	OR	MK3-B1 (C3-3)
4	B2	YE	MK3-B2 (C3-4)
5	A♯1	GR	MK3-A♯1 (C3-5)
6	A♯2	BE	MK3-A♯2 (C3-6)
7	A1	VI	MK3-A1 (C3-7)
8	A2	GY	MK3-A2 (C3-8)
9	G♯1	WH	MK3-G♯1 (C3-9)
10	G♯2	GG	MK3-G♯2 (C3-10)
11	G1	SB	MK3-G1 (C3-11)
12	G2	PK	MK3-G2 (C3-12)

C8

Pin No.	Pin Name	Wire Color	Destination
1	F♯1	BR	MK3-F♯1 (C1-1)
2	F♯2	RE	MK3-F♯2 (C1-2)
3	F1	OR	MK3-F1 (C1-3)
4	F2	YE	MK3-F2 (C1-4)
5	E1	GR	MK3-E1 (C1-5)
6	E2	BE	MK3-E2 (C1-6)
7	D♯1	VI	MK3-D♯1 (C1-7)
8	D♯2	GY	MK3-D♯2 (C1-8)
9	D1	WH	MK3-D1 (C1-9)
10	D2	GG	MK3-D2 (C1-10)

C9

Pin No.	Pin Name	Wire Color	Destination
1	C♯1	SB	MK3-C♯1 (C2-1)
2	C♯2	PK	MK3-C♯2 (C2-2)
3	Vss	BL	MK3-Vss (C2-3)
4	Vss	BL	MK3-Vss (C2-4)
5	Vss	BL	DC-Vss (C2-2)

(Notes)
1. Circuit Board : LC86100 0
2. Diodes
   D65 ~ 80 : 1S1555

KEP-NA80741-07

MK1(GS1), MK4(GS2) Circuit Board & Wiring

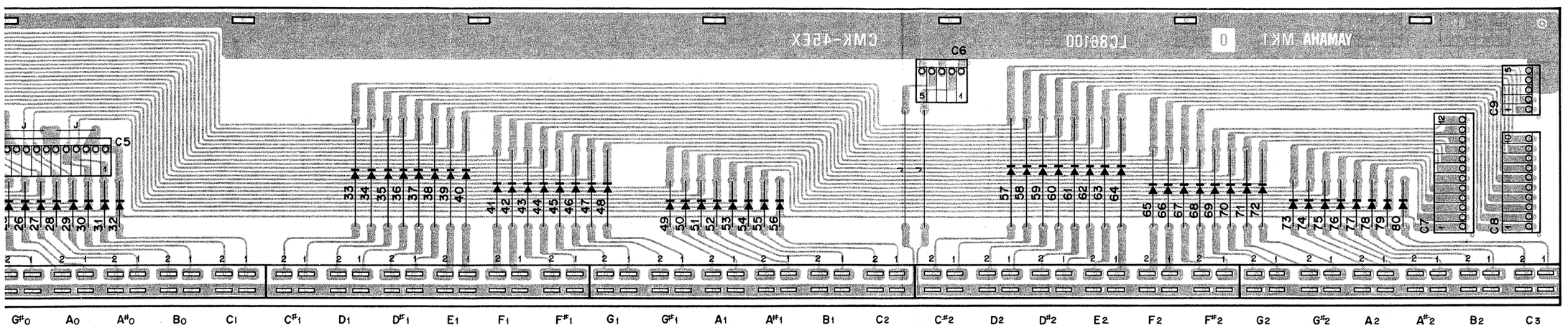

C9	
5	Vss
4	Vss
3	Vss
2	C#2
1	C#1

C8	
10	D2
9	D1
8	D#2
7	D#1
6	E2
5	E1
4	F2
3	F1
2	F#2
1	F#1

C7	
12	G2
11	G1
10	G#2
9	G#1
8	A2
7	A1
6	A#2
5	A#1
4	B2
3	B1
2	C2
1	C1

C5

Pin No.	Pin Name	Wire Color	Destination
1	C1	S PK	KC-C1 (C6-12)
2	Vss	S PK S	
3	Vss	S SB S	
4	C2	S SB	KC-C2 (C6-11)
5	B1	S GG	KC-B1 (C6-10)
6	Vss	S GG S	
7	Vss	S WH S	
8	B2	S WH	KC-B2 (C6-9)
9	A#1	S GY	KC-A#1 (C6-8)
10	Vss	S GY S	
11	Vss	S VI S	
12	A#2	S VI	KC-A#2 (C6-7)

C6

Pin No.	Pin Name	Wire Color	Destination
1	Vss	–	–
2	L3	S GR	KC-L3 (C4-5)
3	Vss	S GR S	
4	L2	S BE	KC-L2 (C4-6)
5	Vss	S BE S	

C7

Pin No.	Pin Name	Wire Color	Destination
1	C1	BR	MK2-C1 (C3-1)
2	C2	RE	MK2-C2 (C3-2)
3	B1	OR	MK2-B1 (C3-3)
4	B2	YE	MK2-B2 (C3-4)
5	A#1	GR	MK2-A#1 (C3-5)
6	A#2	BE	MK2-A#2 (C3-6)
7	A1	VI	MK2-A1 (C3-7)
8	A2	GY	MK2-A2 (C3-8)
9	G#1	WH	MK2-G#1 (C3-9)
10	G#2	GG	MK2-G#2 (C3-10)
11	G1	SB	MK2-G1 (C3-11)
12	G2	PK	MK2-G2 (C3-12)

C8

Pin No.	Pin Name	Wire Color	Destination
1	F#1	BR	MK2-F#1 (C1-1)
2	F#2	RE	MK2-F#2 (C1-2)
3	F1	OR	MK2-F1 (C1-3)
4	F2	YE	MK2-F2 (C1-4)
5	E1	GR	MK2-E1 (C1-5)
6	E2	BE	MK2-E2 (C1-6)
7	D#1	VI	MK2-D#1 (C1-7)
8	D#2	GY	MK2-D#2 (C1-8)
9	D1	WH	MK2-D1 (C1-9)
10	D2	GG	MK2-D2 (C1-10)

C9

Pin No.	Pin Name	Wire Color	Destination
1	C#1	SB	MK2-C#1 (C2-1)
2	C#2	PK	MK2-C#2 (C2-2)
3	Vss	BL	MK2-Vss (C2-3)
4	Vss	BL	MK2-Vss (C2-4)
5	Vss	BL	DC-Vss (C1-2)

C5

Pin No.	Pin Name	Wire Color	Destination
1	C1	S PK	KC-C1 (C6-12)
2	Vss	S PK S	
3	Vss	S SB S	
4	C2	S SB	KC-C2 (C6-11)
5	B1	S GG	KC-B1 (C6-10)
6	Vss	S GG S	
7	Vss	S WH S	
8	B2	S WH	KC-B2 (C6-9)
9	A♯1	S GY	KC-A♯1 (C6-8)
10	Vss	S GY S	
11	Vss	S VI S	
12	A♯2	S VI	KC-A♯2 (C6-7)

C6

Pin No.	Pin Name	Wire Color	Destination
1	Vss	–	–
2	L3	S GR	KC-L3 (C4-5)
3	Vss	S GR S	
4	L2	S BE	KC-L2 (C4-6)
5	Vss	S BE S	

C7

Pin No.	Pin Name	Wire Color	Destination
1	C1	BR	MK3-C1 (C3-1)
2	C2	RE	MK3-C2 (C3-2)
3	B1	OR	MK3-B1 (C3-3)
4	B2	YE	MK3-B2 (C3-4)
5	A♯1	GR	MK3-A♯1 (C3-5)
6	A♯2	BE	MK3-A♯2 (C3-6)
7	A1	VI	MK3-A1 (C3-7)
8	A2	GY	MK3-A2 (C3-8)
9	G♯1	WH	MK3-G♯1 (C3-9)
10	G♯2	GG	MK3-G♯2 (C3-10)
11	G1	SB	MK3-G1 (C3-11)
12	G2	PK	MK3-G2 (C3-12)

C8

Pin No.	Pin Name	Wire Color	Destination
1	F♯1	BR	MK3-F♯1 (C1-1)
2	F♯2	RE	MK3-F♯2 (C1-2)
3	F1	OR	MK3-F1 (C1-3)
4	F2	YE	MK3-F2 (C1-4)
5	E1	GR	MK3-E1 (C1-5)
6	E2	BE	MK3-E2 (C1-6)
7	D♯1	VI	MK3-D♯1 (C1-7)
8	D♯2	GY	MK3-D♯2 (C1-8)
9	D1	WH	MK3-D1 (C1-9)
10	D2	GG	MK3-D2 (C1-10)

C9

Pin No.	Pin Name	Wire Color	Destination
1	C♯1	SB	MK3-C♯1 (C2-1)
2	C♯2	PK	MK3-C♯2 (C2-2)
3	Vss	BL	MK3-Vss (C2-3)
4	Vss	BL	MK3-Vss (C2-4)
5	Vss	BL	DC-Vss (C2-2)

(Notes)
1. Circuit Board : LC86100 0
2. Diodes
   D1 ~ 80 : 1S1555
3. Connector
   C1, 6, 9 : 5P (T, E)
   C2 ~ 5, 7 : 12P (T, E)
   C8 : 10P (T, E)

KEP-NA80697-04 ⚠

(Notes)
1. Circuit Board : LC86100 0
2. Diodes
   D65 ~ 80 : 1S1555

KEP-NA80741-07

View from the component side of the circuit board

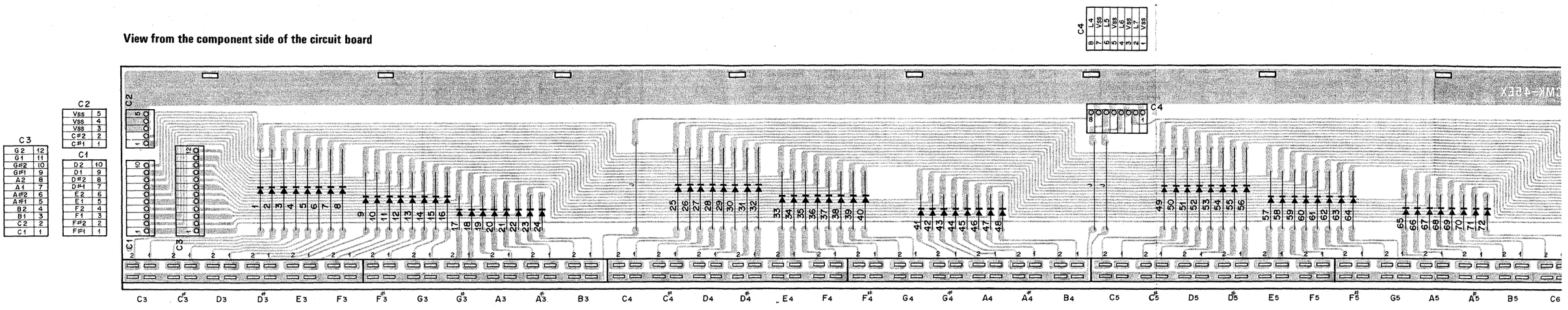

GS1

C1

Pin No.	Pin Name	Wire Color	Destination
1	F#1	BR	MK1-F#1 (C8-1)
2	F#2	RE	MK1-F#2 (C8-2)
3	F1	OR	MK1-F1 (C8-3)
4	F2	YE	MK1-F2 (C8-4)
5	E1	GR	MK1-E1 (C8-5)
6	E2	BE	MK1-E2 (C8-6)
7	D#1	VI	MK1-D#1 (C8-7)
8	D#2	GY	MK1-D#2 (C8-8)
9	D1	WH	MK1-D1 (C8-9)
10	D2	GG	MK1-D2 (C8-10)

C2

Pin No.	Pin Name	Wire Color	Destination
1	C#1	SB	MK1-C#1 (C9-1)
2	C#2	PK	MK1-C#2 (C9-2)
3	Vss	BL	MK1-Vss (C9-3)
4	Vss	BL	MK1-Vss (C9-4)
5	Vss	–	–

C3

Pin No.	Pin Name	Wire Color	Destination
1	C1	BR	MK1-C1 (C7-1)
2	C2	RE	MK1-C2 (C7-2)
3	B1	OR	MK1-B1 (C7-3)
4	B2	YE	MK1-B2 (C7-4)
5	A#1	GR	MK1-A#1 (C7-5)
6	A#2	BE	MK1-A#2 (C7-6)
7	A1	VI	MK1-A1 (C7-7)
8	A2	GY	MK1-A2 (C7-8)
9	G#1	WH	MK1-G#1 (C7-9)
10	G#2	GG	MK1-G#2 (C7-10)
11	G1	SB	MK1-G1 (C7-11)
12	G2	PK	MK1-G2 (C7-12)

C4

Pin No.	Pin Name	Wire Color	Destination
1	Vss	S BR S	–
2	L7	S BR	KC-L7 (C4-1)
3	Vss	S RE S	
4	L6	S RE	KC-L6 (C4-2)
5	Vss	S OR S	
6	L5	S OR	KC-L5 (C4-3)
7	Vss	S YE S	
8	L4	S YE	KC-L4 (C4-4)

(Notes)
1. Circuit Board : LC86110 0
2. Diodes
   D1 ~ 96 : 1S1555
3. Connector
   C1 : 10P (T, E)
   C2 : 5P (T, E)
   C3 : 12P (T, E)
   C4 : 8P (T, E)

GS2

C1

Pin No.	Pin Name	Wire Color	Destination
1	F#1	BR	MK4-F#1 (C8-1)
2	F#2	RE	MK4-F#2 (C8-2)
3	F1	OR	MK4-F1 (C8-3)
4	F2	YE	MK4-F2 (C8-4)
5	E1	GR	MK4-E1 (C8-5)
6	E2	BE	MK4-E2 (C8-6)
7	D#1	VI	MK4-D#1 (C8-7)
8	D#2	GY	MK4-D#2 (C8-8)
9	D1	WH	MK4-D1 (C8-9)
10	D2	GG	MK4-D2 (C8-10)

C2

Pin No.	Pin Name	Wire Color	Destination
1	C#1	SB	MK4-C#1 (C9-1)
2	C#2	PK	MK4-C#2 (C9-2)
3	Vss	BL	MK4-Vss (C9-3)
4	Vss	BL	MK4-Vss (C9-4)
5	Vss	–	–

C3

Pin No.	Pin Name	Wire Color	Destination
1	C1	BR	MK4-C1 (C7-1)
2	C2	RE	MK4-C2 (C7-2)
3	B1	OR	MK4-B1 (C7-3)
4	B2	YE	MK4-B2 (C7-4)
5	A#1	GR	MK4-A#1 (C7-5)
6	A#2	BE	MK4-A#2 (C7-6)
7	A1	VI	MK4-A1 (C7-7)
8	A2	GY	MK4-A2 (C7-8)
9	G#1	WH	MK4-G#1 (C7-9)
10	G#2	GG	MK4-G#2 (C7-10)
11	G1	SB	MK4-G1 (C7-11)
12	G2	PK	MK4-G2 (C7-12)

C4

Pin No.	Pin Name	Wire Color	Destination
1	Vss	S BR S	
2	L7	S BR	KC-L7 (C4-1)
3	Vss	S RE S	
4	L6	S RE	KC-L6 (C4-2)
5	Vss	S OR S	
6	L5	S OR	KC-L5 (C4-3)
7	Vss	S YE S	
8	L4	S YE	KC-L4 (C4-4)

View from the component side of the circuit board

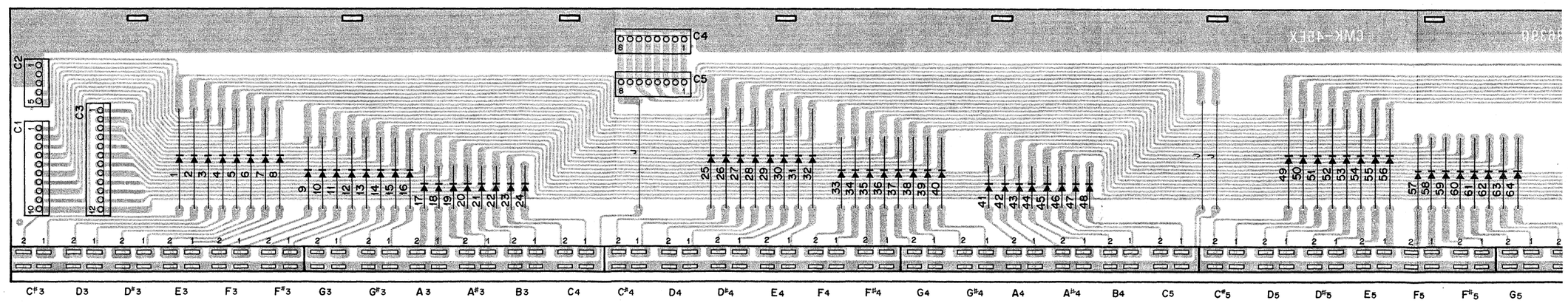

MK2(GS1), MK3(GS2) Circuit Board & Wiring

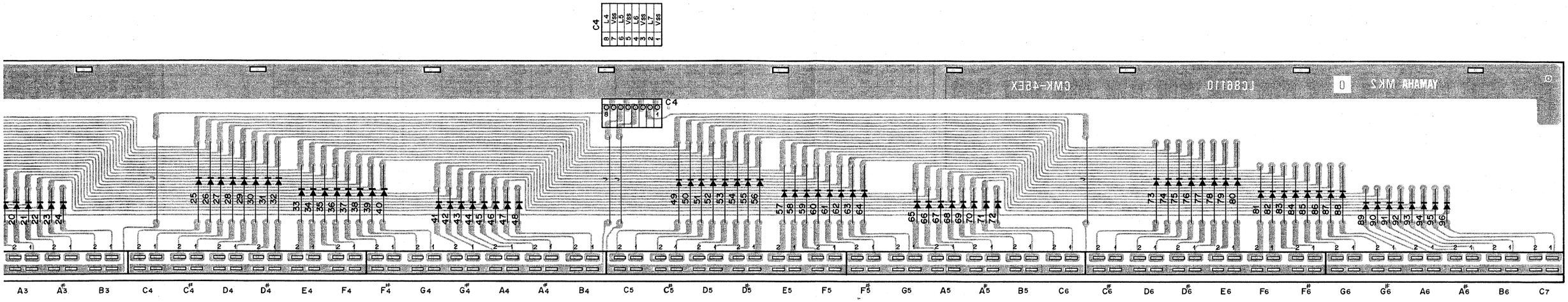

Destination
–
KC-L7 (C4-1)
KC-L6 (C4-2)
KC-L5 (C4-3)
KC-L4 (C4-4)

(Notes)
1. Circuit Board : LC86110 0
2. Diodes
   D1 ~ 96 : 1S1555
3. Connector
   C1 : 10P (T, E)
   C2 : 5P (T, E)
   C3 : 12P (T, E)
   C4 : 8P (T, E)

GS2

C1

Pin No.	Pin Name	Wire Color	Destination
1	F♯1	BR	MK4-F♯1 (C8-1)
2	F♯2	RE	MK4-F♯2 (C8-2)
3	F1	OR	MK4-F1 (C8-3)
4	F2	YE	MK4-F2 (C8-4)
5	E1	GR	MK4-E1 (C8-5)
6	E2	BE	MK4-E2 (C8-6)
7	D♯1	VI	MK4-D♯1 (C8-7)
8	D♯2	GY	MK4-D♯2 (C8-8)
9	D1	WH	MK4-D1 (C8-9)
10	D2	GG	MK4-D2 (C8-10)

C2

Pin No.	Pin Name	Wire Color	Destination
1	C♯1	SB	MK4-C♯1 (C9-1)
2	C♯2	PK	MK4-C♯2 (C9-2)
3	Vss	BL	MK4-Vss (C9-3)
4	Vss	BL	MK4-Vss (C9-4)
5	Vss	–	–

C3

Pin No.	Pin Name	Wire Color	Destination
1	C1	BR	MK4-C1 (C7-1)
2	C2	RE	MK4-C2 (C7-2)
3	B1	OR	MK4-B1 (C7-3)
4	B2	YE	MK4-B2 (C7-4)
5	A♯1	GR	MK4-A♯1 (C7-5)
6	A♯2	BE	MK4-A♯2 (C7-6)
7	A1	VI	MK4-A1 (C7-7)
8	A2	GY	MK4-A2 (C7-8)
9	G♯1	WH	MK4-G♯1 (C7-9)
10	G♯2	GG	MK4-G♯2 (C7-10)
11	G1	SB	MK4-G1 (C7-11)
12	G2	PK	MK4-G2 (C7-12)

C4

Pin No.	Pin Name	Wire Color	Destination
1	Vss	S BR S	
2	L7	S BR	KC-L7 (C4-1)
3	Vss	S RE S	
4	L6	S RE	KC-L6 (C4-2)
5	Vss	S OR S	
6	L5	S OR	KC-L5 (C4-3)
7	Vss	S YE S	
8	L4	S YE	KC-L4 (C4-4)

C5

Pin No.	Pin Name	Wire Color	Destination
1	Vss		TEST POINT
2	L7		TEST POINT
3	Vss		TEST POINT
4	L6		TEST POINT
5	Vss		TEST POINT
6	L5		TEST POINT
7	Vss		TEST POINT
8	L4		TEST POINT

C6

Pin No.	Pin Name	Wire Color	Destination
1	CM1		TEST POINT
2	–	–	–
3	CM2		TEST POINT

(Notes)
1. Circuit Board : LC86390 1
2. Diodes
   D1 ~ 80 : 1S1555
3. NH Connector
   C1 : 10P (T, E)
   C2 : 5P (T, E)
   C3 : 12P (T, E)
   C4 : 8P (T, E)

KEP-NA80738 ⚠

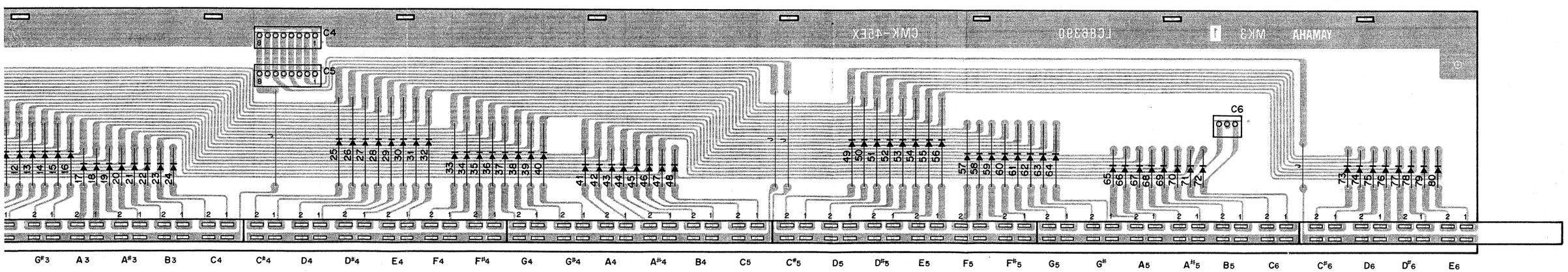

View from the component side of the circuit board

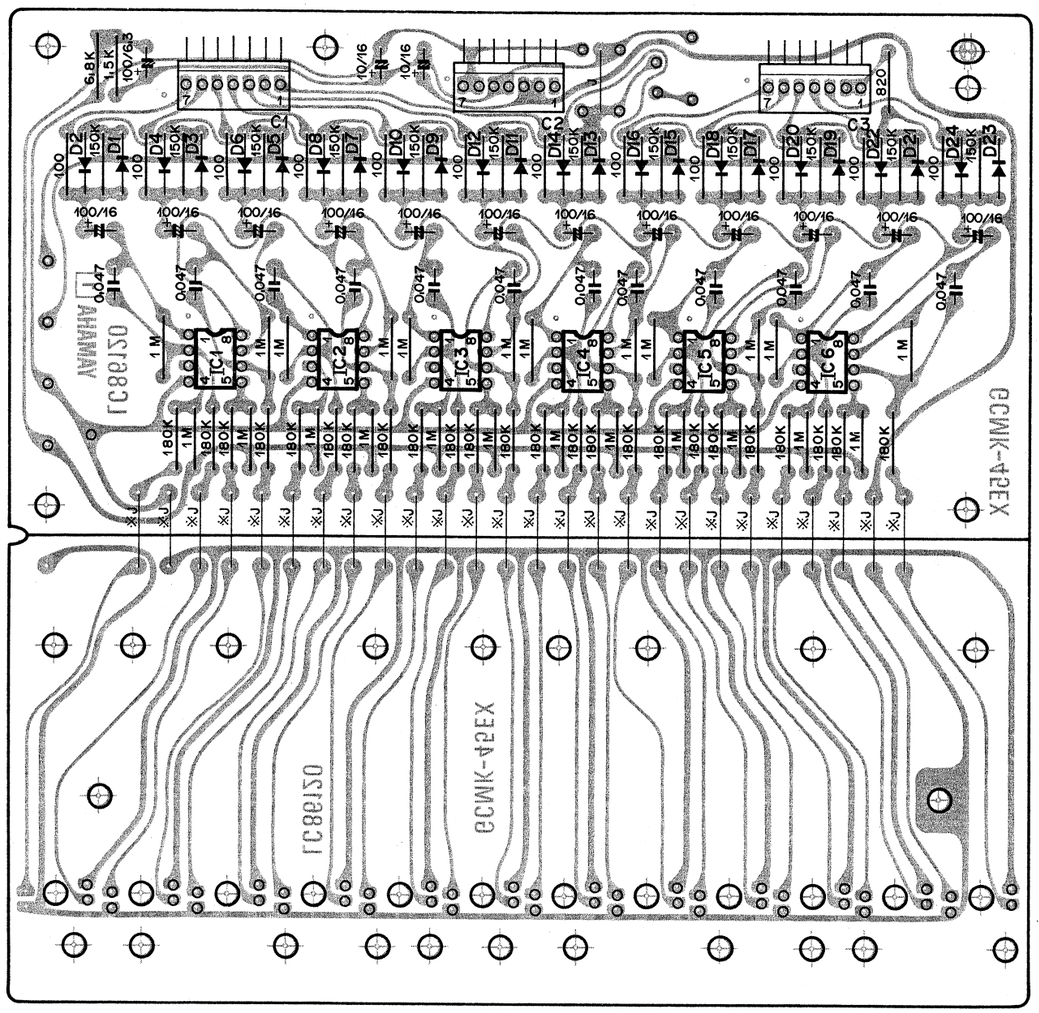

(Notes)
1. Circuit Board : LC86120 [1]
2. IC
   IC1 ~ 6 : NJM4558DN
3. Diodes
   D1 ~ 24 : 1S1555 (1S2473)

KEP-NA80699 ⚠

PCA1

C1

Pin No.	Pin Name	Wire Color	Destination
1	C #	RE	MPX-G1 (C2-12)
2	D	OR	MPX-D1 (C2-11)
3	D #	YE	MPX-D # 1 (C2-10)
4	E	GR	MPX-E1 (C2-9)
5	F	BE	MPX-F1 (C2-8)
6	F #	VI	MPX-F # 1 (C2-7)
7	G	GY	MPX-G1 (C2-6)

C2

Pin No.	Pin Name	Wire Color	Destination
1	–15	BR	CNB- –15 (C4-3)
2	–15	BR	PCA2- –15 (C2-1)
3	E	BL	CNB-E (C4-5)
4	E	BL	PCA2-E (C2-3)
5	+15	RE	CNB-15S (C4-7)
6	+15	RE	PCA2-+15 (C2-5)
7	–	–	–

C3

Pin No.	Pin Name	Wire Color	Destination
1	G #	WH	MPX-G # 1 (C2-5)
2	A	GG	MPX-A1 (C2-4)
3	A #	SB	MPX-A # 1 (C2-3)
4	B	PK	MPX-B1 (C2-2)
5	C	BR	MPX-C2 (C2-1)
6	IC	GY	CNB-IC (C4-1)
7	IC	GY	PCA2-IC (C3-6)

PCA3

C1

Pin No.	Pin Name	Wire Color	Destination
1	C #	RE	MPX-C # 3 (C4-12)
2	D	OR	MPX-D3 (C4-11)
3	D #	YE	MPX-D # 3 (C4-10)
4	E	GR	MPX-E3 (C4-9)
5	F	BE	MPX-F3 (C4-8)
6	F #	VI	MPX-F # 3 (C4-7)
7	G	GY	MPX-G3 (C4-6)

C2

Pin No.	Pin Name	Wire Color	Destination
1	–15	BR	PCA2- –15 (C2-2)
2	–15	BR	PCA4- –15 (C2-1)
3	E	BL	PCA2-E (C2-4)
4	E	BL	PCA4-E (C2-3)
5	+15	OR	PCA2-+15 (C2-6)
6	+15	OR	PCA4-+15 (C2-5)
7	–	–	–

C3

Pin No.	Pin Name	Wire Color	Destination
1	G #	WH	MPX-G # 3 (C4-5)
2	A	GG	MPX-A3 (C4-4)
3	A #	SB	MPX-A # 3 (C4-3)
4	B	PK	MPX-B3 (C4-2)
5	C	BR	MPX-C4 (C4-1)
6	IC	GY	PCA2-IC (C3-7)
7	IC	GY	PCA4-IC (C3-6)

PCA5

C1

Pin No.	Pin Name	Wire Color	Destination
1	C #	RE	MPX-C # 5 (C6-12)
2	D	OR	MPX-D5 (C6-11)
3	D #	YE	MPX-D # 5 (C6-10)
4	E	GR	MPX-E5 (C6-9)
5	F	BE	MPX-F5 (C6-8)
6	F #	VI	MPX-F # 5 (C6-7)
7	G	GY	MPX-G5 (C6-6)

C2

Pin No.	Pin Name	Wire Color	Destination
1	–15	BR	PCA4- –15 (C2-2)
2	–15	BR	PCA6- –15 (C2-1)
3	E	BL	PCA4-E (C2-4)
4	E	BL	PCA6-E (C2-3)
5	+15	OR	PCA4-+15 (C2-6)
6	+15	OR	PCA6-+15 (C2-5)
7			

C3

Pin No.	Pin Name	Wire Color	Destination
1	G #	WH	MPX-G # 5 (C6-5)
2	A	GG	MPX-A5 (C6-4)
3	A #	SB	MPX-A # 5 (C6-3)
4	B	PK	MPX-B5 (C6-2)
5	C	BR	MPX-C6 (C6-1)
6	IC	GY	PCA4-IC (C3-7)
7	IC	GY	PCA6-IC (C3-6)

PCA7

C1

Pin No.	Pin Name	Wire Color	Destination
1	C #	RE	MPX-C # 7 (C8-12)
2	D	OR	MPX-D7 (C8-11)
3	D #	YE	MPX-D # 7 (C8-10)
4	E	GR	MPX-E7 (C8-9)
5	F	BE	MPX-F7 (C8-8)
6	F #	VI	MPX-F # 7 (C8-7)
7	G	GY	MPX-G7 (C8-6)

C2

Pin No.	Pin Name	Wire Color	Destination
1	–15	BR	PCA6- –15 (C2-2)
2	–15	–	–
3	E	BL	PCA6-E (C2-4)
4	E	–	–
5	+15	OR	PCA6-+15 (C2-6)
6	+15	–	–
7	–	–	–

C3

Pin No.	Pin Name	Wire Color	Destination
1	G #	WH	MPX-G # 7 (C8-5)
2	A	GG	MPX-A7 (C8-4)
3	A #	SB	MPX-A # 7 (C8-3)
4	B	PK	MPX-B7 (C8-2)
5	C	BR	MPX-C8 (C8-1)
6	IC	GY	PCA6-IC (C3-7)
7	IC	–	–

PCA2

C1

Pin No.	Pin Name	Wire Color	Destination
1	C #	RE	MPX-C # 2 (C3-12)
2	D	OR	MPX-D2 (C3-11)
3	D #	YE	MPX-D # 2 (C3-10)
4	E	GR	MPX-E2 (C3-9)
5	F	BE	MPX-F2 (C3-8)
6	F #	VI	MPX-F # 2 (C3-7)
7	G	GY	MPX-G2 (C3-6)

C2

Pin No.	Pin Name	Wire Color	Destination
1	–15	BR	PCA1- –15 (C2-2)
2	–15	BR	PCA3- –15 (C2-1)
3	E	BL	PCA1-E (C2-4)
4	E	BL	PCA3-E (C2-3)
5	+15	OR	PCA1-+15 (C2-6)
6	+15	OR	PCA3-+15 (C2-5)
7	–	–	–

C3

Pin No.	Pin Name	Wire Color	Destination
1	G #	WH	MPX-G # 2 (C3-5)
2	A	GG	MPX-A2 (C3-4)
3	A #	SB	MPX-A # 2 (C3-3)
4	B	PK	MPX-B2 (C3-2)
5	C	BR	MPX-C3 (C3-1)
6	IC	GY	PCA1-IC (C3-7)
7	IC	GY	PCA3-IC (C3-6)

PCA4

C1

Pin No.	Pin Name	Wire Color	Destination
1	C #	RE	MPX-C # 4 (C5-12)
2	D	OR	MPX-D4 (C5-11)
3	D #	YE	MPX-D # 4 (C5-10)
4	E	GR	MPX-E4 (C5-9)
5	F	BE	MPX-F4 (C5-8)
6	F #	VI	MPX-F # 4 (C5-7)
7	G	GY	MPX-G4 (C5-6)

C2

Pin No.	Pin Name	Wire Color	Destination
1	–15	BR	PCA3- –15 (C2-2)
2	–15	BR	PCA5- –15 (C2-1)
3	E	BL	PCA3-E (C2-4)
4	E	BL	PCA5-E (C2-3)
5	+15	OR	PCA3-+15 (C2-6)
6	+15	OR	PCA5-+15 (C2-5)
7	–	–	–

C3

Pin No.	Pin Name	Wire Color	Destination
1	G #	WH	MPX-G # 4 (C5-5)
2	A	GG	MPX-A4 (C5-4)
3	A #	SB	MPX-A # 4 (C5-3)
4	B	PK	MPX-B4 (C5-2)
5	C	BR	MPX-C5 (C5-1)
6	IC	GY	PCA3-IC (C3-7)
7	IC	GY	PCA5-IC (C3-6)

PCA6

C1

Pin No.	Pin Name	Wire Color	Destination
1	C #	RE	MPX-C # 6 (C7-12)
2	D	OR	MPX-D6 (C7-11)
3	D #	YE	MPX-D # 6 (C7-10)
4	E	GR	MPX-E6 (C7-9)
5	F	BE	MPX-F6 (C7-8)
6	F #	VI	MPX-F # 6 (C7-7)
7	G	GY	MPX-G6 (C7-6)

C2

Pin No.	Pin Name	Wire Color	Destination
1	–15	BR	PCA5- –15 (C2-2)
2	–15	BR	PCA7- –15 (C2-1)
3	E	BL	PCA5-E (C2-4)
4	E	BL	PCA7-E (C2-3)
5	+15	OR	PCA5-+15 (C2-6)
6	+15	OR	PCA7-+15 (C2-5)
7	–	–	–

C3

Pin No.	Pin Name	Wire Color	Destination
1	G #	WH	MPX-G # 6 (C7-5)
2	A	GG	MPX-A6 (C7-4)
3	A #	SB	MPX-A # 6 (C7-3)
4	B	PK	MPX-B6 (C7-2)
5	C	BR	MPX-C7 (C7-1)
6	IC	GY	PCA5-IC (C3-7)
7	IC	GY	PCA7-IC (C3-6)

PCA

View from the component side of the

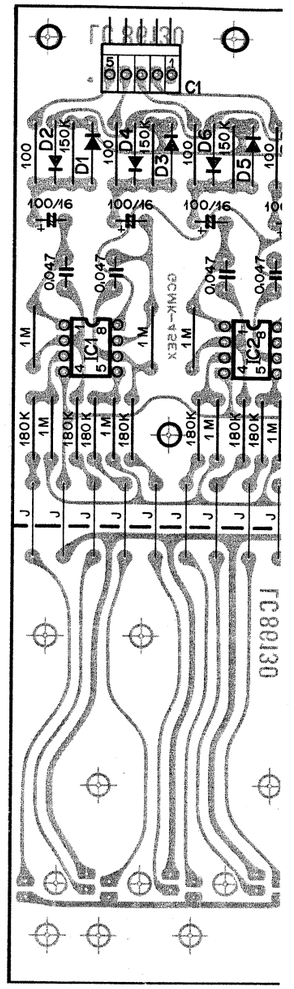

(Notes)
1. Circuit Board : LC86130 [1]
2. IC
   IC1, 2 : NJM4558D
3. Diodes
   D1 ~ 8 : 1S1555 (1S

KEP-NA80700 ⚠

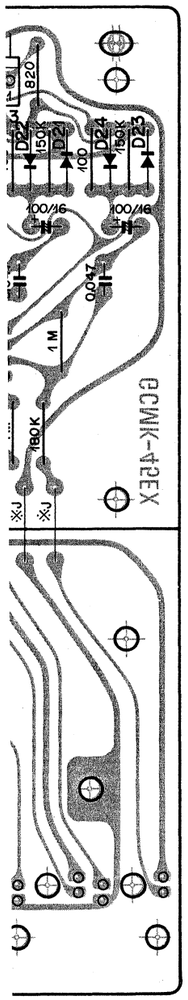

:86120 [1]

IM4558DN

1555 (1S2473)

PCA1

C1

Pin No.	Pin Name	Wire Color	Destination
1	C #	RE	MPX-G1 (C2-12)
2	D	OR	MPX-D1 (C2-11)
3	D #	YE	MPX-D # 1 (C2-10)
4	E	GR	MPX-E1 (C2-9)
5	F	BE	MPX-F1 (C2-8)
6	F #	VI	MPX-F # 1 (C2-7)
7	G	GY	MPX-G1 (C2-6)

C2

Pin No.	Pin Name	Wire Color	Destination
1	–15	BR	CNB- –15 (C4-3)
2	–15	BR	PCA2- –15 (C2-1)
3	E	BL	CNB-E (C4-5)
4	E	BL	PCA2-E (C2-3)
5	+15	RE	CNB-15S (C4-7)
6	+15	RE	PCA2+15 (C2-5)
7	–	–	–

C3

Pin No.	Pin Name	Wire Color	Destination
1	G #	WH	MPX-G # 1 (C2-5)
2	A	GG	MPX-A1 (C2-4)
3	A #	SB	MPX-A # 1 (C2-3)
4	B	PK	MPX-B1 (C2-2)
5	C	BR	MPX-C2 (C2-1)
6	IC	GY	CNB-IC (C4-1)
7	IC	GY	PCA2-IC (C3-6)

PCA3

C1

Pin No.	Pin Name	Wire Color	Destination
1	C #	RE	MPX-C # 3 (C4-12)
2	D	OR	MPX-D3 (C4-11)
3	D #	YE	MPX-D # 3 (C4-10)
4	E	GR	MPX-E3 (C4-9)
5	F	BE	MPX-F3 (C4-8)
6	F #	VI	MPX-F # 3 (C4-7)
7	G	GY	MPX-G3 (C4-6)

C2

Pin No.	Pin Name	Wire Color	Destination
1	–15	BR	PCA2- –15 (C2-2)
2	–15	BR	PCA4- –15 (C2-1)
3	E	BL	PCA2-E (C2-4)
4	E	BL	PCA4-E (C2-3)
5	+15	OR	PCA2+15 (C2-6)
6	+15	OR	PCA4+15 (C2-5)
7	–	–	–

C3

Pin No.	Pin Name	Wire Color	Destination
1	G #	WH	MPX-G # 3 (C4-5)
2	A	GG	MPX-A3 (C4-4)
3	A #	SB	MPX-A # 3 (C4-3)
4	B	PK	MPX-B3 (C4-2)
5	C	BR	MPX-C4 (C4-1)
6	IC	GY	PCA2-IC (C3-7)
7	IC	GY	PCA4-IC (C3-6)

PCA5

C1

Pin No.	Pin Name	Wire Color	Destination
1	C #	RE	MPX-C # 5 (C6-12)
2	D	OR	MPX-D5 (C6-11)
3	D #	YE	MPX-D # 5 (C6-10)
4	E	GR	MPX-E5 (C6-9)
5	F	BE	MPX-F5 (C6-8)
6	F #	VI	MPX-F # 5 (C6-7)
7	G	GY	MPX-G5 (C6-6)

C2

Pin No.	Pin Name	Wire Color	Destination
1	–15	BR	PCA4- –15 (C2-2)
2	–15	BR	PCA6- –15 (C2-1)
3	E	BL	PCA4-E (C2-4)
4	E	BL	PCA6-E (C2-3)
5	+15	OR	PCA4+15 (C2-6)
6	+15	OR	PCA6+15 (C2-5)
7			

C3

Pin No.	Pin Name	Wire Color	Destination
1	G #	WH	MPX-G # 5 (C6-5)
2	A	GG	MPX-A5 (C6-4)
3	A #	SB	MPX-A # 5 (C6-3)
4	B	PK	MPX-B5 (C6-2)
5	C	BR	MPX-C6 (C6-1)
6	IC	GY	PCA4-IC (C3-7)
7	IC	GY	PCA6-IC (C3-6)

PCA7

C1

Pin No.	Pin Name	Wire Color	Destination
1	C #	RE	MPX-C # 7 (C8-12)
2	D	OR	MPX-D7 (C8-11)
3	D #	YE	MPX-D # 7 (C8-10)
4	E	GR	MPX-E7 (C8-9)
5	F	BE	MPX-F7 (C8-8)
6	F #	VI	MPX-F # 7 (C8-7)
7	G	GY	MPX-G7 (C8-6)

C2

Pin No.	Pin Name	Wire Color	Destination
1	–15	BR	PCA6- –15 (C2-2)
2	–15	–	–
3	E	BL	PCA6-E (C2-4)
4	E	–	–
5	+15	OR	PCA6+15 (C2-6)
6	+15	–	–
7	–	–	–

C3

Pin No.	Pin Name	Wire Color	Destination
1	G #	WH	MPX-G # 7 (C8-5)
2	A	GG	MPX-A7 (C8-4)
3	A #	SB	MPX-A # 7 (C8-3)
4	B	PK	MPX-B7 (C8-2)
5	C	BR	MPX-C8 (C8-1)
6	IC	GY	PCA6-IC (C3-7)
7	IC	–	–

PCA2

C1

Pin No.	Pin Name	Wire Color	Destination
1	C #	RE	MPX-C # 2 (C3-12)
2	D	OR	MPX-D2 (C3-11)
3	D #	YE	MPX-D # 2 (C3-10)
4	E	GR	MPX-E2 (C3-9)
5	F	BE	MPX-F2 (C3-8)
6	F #	VI	MPX-F # 2 (C3-7)
7	G	GY	MPX-G2 (C3-6)

C2

Pin No.	Pin Name	Wire Color	Destination
1	–15	BR	PCA1- –15 (C2-2)
2	–15	BR	PCA3- –15 (C2-1)
3	E	BL	PCA1-E (C2-4)
4	E	BL	PCA3-E (C2-3)
5	+15	OR	PCA1+15 (C2-6)
6	+15	OR	PCA3+15 (C2-5)
7	–	–	–

C3

Pin No.	Pin Name	Wire Color	Destination
1	G #	WH	MPX-G # 2 (C3-5)
2	A	GG	MPX-A2 (C3-4)
3	A #	SB	MPX-A # 2 (C3-3)
4	B	PK	MPX-B2 (C3-2)
5	C	BR	MPX-C3 (C3-1)
6	IC	GY	PCA1-IC (C3-7)
7	IC	GY	PCA3-IC (C3-6)

PCA4

C1

Pin No.	Pin Name	Wire Color	Destination
1	C #	RE	MPX-C # 4 (C5-12)
2	D	OR	MPX-D4 (C5-11)
3	D #	YE	MPX-D # 4 (C5-10)
4	E	GR	MPX-E4 (C5-9)
5	F	BE	MPX-F4 (C5-8)
6	F #	VI	MPX-F # 4 (C5-7)
7	G	GY	MPX-G4 (C5-6)

C2

Pin No.	Pin Name	Wire Color	Destination
1	–15	BR	PCA3- –15 (C2-2)
2	–15	BR	PCA5- –15 (C2-1)
3	E	BL	PCA3-E (C2-4)
4	E	BL	PCA5-E (C2-3)
5	+15	OR	PCA3+15 (C2-6)
6	+15	OR	PCA5+15 (C2-5)
7	–	–	–

C3

Pin No.	Pin Name	Wire Color	Destination
1	G #	WH	MPX-G # 4 (C5-5)
2	A	GG	MPX-A4 (C5-4)
3	A #	SB	MPX-A # 4 (C5-3)
4	B	PK	MPX-B4 (C5-2)
5	C	BR	MPX-C5 (C5-1)
6	IC	GY	PCA3-IC (C3-7)
7	IC	GY	PCA5-IC (C3-6)

PCA6

C1

Pin No.	Pin Name	Wire Color	Destination
1	C #	RE	MPX-C # 6 (C7-12)
2	D	OR	MPX-D6 (C7-11)
3	D #	YE	MPX-D # 6 (C7-10)
4	E	GR	MPX-E6 (C7-9)
5	F	BE	MPX-F6 (C7-8)
6	F #	VI	MPX-F # 6 (C7-7)
7	G	GY	MPX-G6 (C7-6)

C2

Pin No.	Pin Name	Wire Color	Destination
1	–15	BR	PCA5- –15 (C2-2)
2	–15	BR	PCA7- –15 (C2-1)
3	E	BL	PCA5-E (C2-4)
4	E	BL	PCA7-E (C2-3)
5	+15	OR	PCA5+15 (C2-6)
6	+15	OR	PCA7+15 (C2-5)
7	–	–	–

C3

Pin No.	Pin Name	Wire Color	Destination
1	G #	WH	MPX-G # 6 (C7-5)
2	A	GG	MPX-A6 (C7-4)
3	A #	SB	MPX-A # 6 (C7-3)
4	B	PK	MPX-B6 (C7-2)
5	C	BR	MPX-C7 (C7-1)
6	IC	GY	PCA5-IC (C3-7)
7	IC	GY	PCA7-IC (C3-6)

PCA, PCB Circuit Board & Wiring

View from the component side of the circuit board

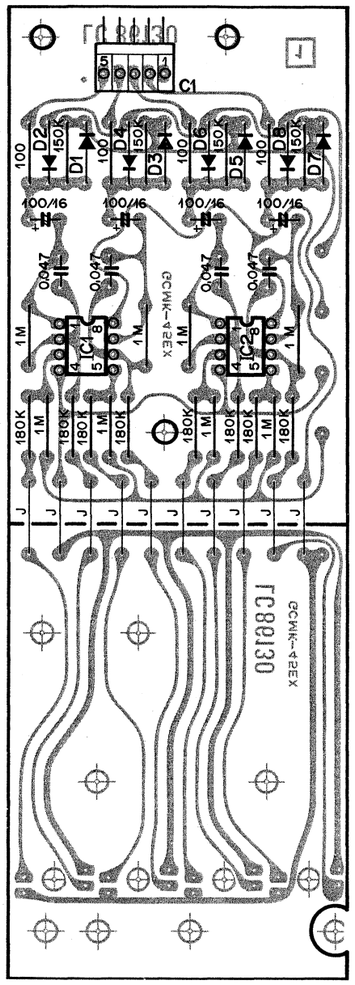

(Notes)
1. Circuit Board : LC86130 [1]
2. IC
   IC1, 2 : NJM4558DV
3. Diodes
   D1 ~ 8 : 1S1555 (1S2473)

KEP-NA80700 ⚠

C1

Pin No.	Pin Name	Wire Color	Destination
1	A	GG	MPX-A0 (C1-3)
2	A #	SB	MPX-A # 0 (C1-3)
3	B	PK	MPX-B0 (C1-2)
4	C	BR	MPX-C1 (C1-1)
5			

DC Circuit Board & Wiring

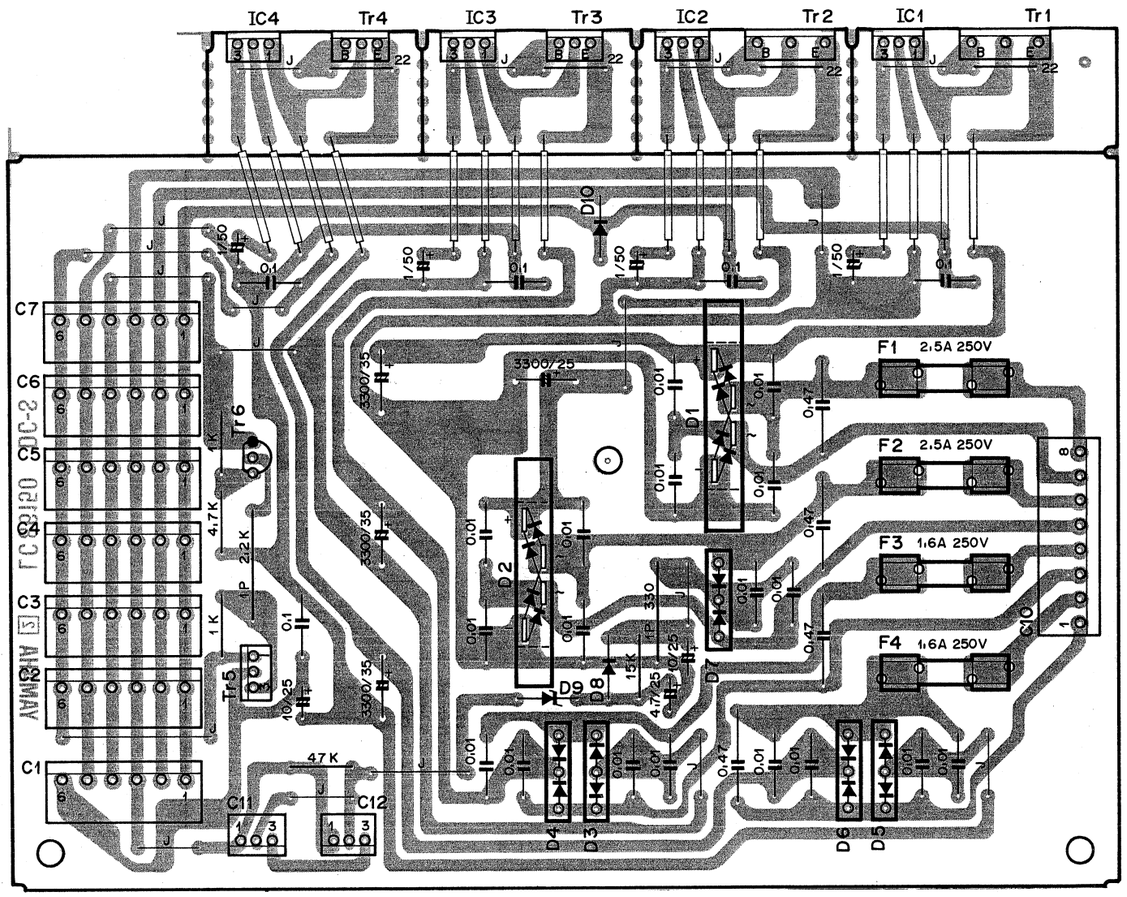

View from the component side of the circuit board

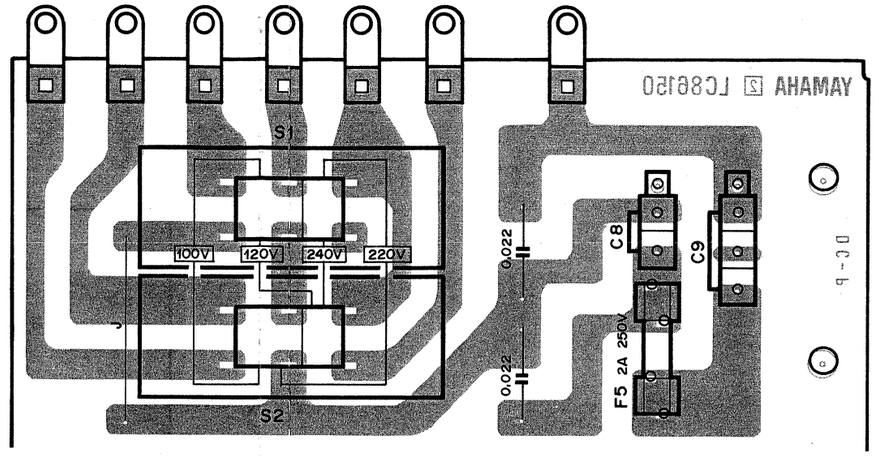

View from the component side of the circuit board

(Notes)

1. Circuit Board : LC86150 [2]
2. Transistors
   - Tr1, 2 : 2SB686 (R, O)
   - Tr3, 4, 5 : 2SB595 (O, Y)
   - Tr6 : 2SC509 (O, Y)
3. IC
   - IC1 : μPC14312H
   - IC2 : μPC14305H
   - IC3, 4 : μPC14315H
4. Diodes
   - D1, 2 : 5B2
   - D3, 5 : 1D2Z1
   - D4, 6, 7 : 1D2C1
   - D8, 10 : 10E-1
   - D9 : RD3.6EB1
5. * marked : Spark killer PME265 (2)
6. Resistor
   - * marked :
7. Connector
   - C1 ~ 7 : #5273-06
   - C8 : LB-02
   - C9 : LB-03
   - C10 : #5273-08
   - C11, 12 : NH Connector 3P (T, E)

C1

Pin No.	Pin Name	Wire Color	Destination
1	–7	GR	CR-M5V (C2-3)
2	Vss	BL	MK1-Vss (C9-5)
3	–12	BE	CR-MG (C2-1)
4	–15	–	–
5	E	–	–
6	+15S	RE	CNB-+15S (C3-1)

C2

Pin No.	Pin Name	Wire Color	Destination
1	–7	GR	LED-3
2	Vss	BL	CNB-Vss (C3-2)
3	–12	BE	CNB- –12 (C3-3)
4	–15	BR	CNB- –15 (C3-4)
5	E	BL	CNB-E (C3-5)
6	+15	OR	CNB-+15 (C3-6)

C3

Pin No.	Pin Name	Wire Color	Destination
1	–7	GR	RW- –7 (C8-1)
2	Vss	BL	RW-Vss (C8-2)
3	–12	BE	RW- –12 (C8-3)
4	–15	–	–
5	E	–	–
6	+15	–	–

C4

Pin No.	Pin Name	Wire Color	Destination
1	–7	GR	MPX- –7 (C9-1)
2	Vss	BL	MPX-Vss (C9-2)
3	–12	BE	MPX- –12 (C9-3)
4	–15	BR	MPX- –15 (C9-4)
5	E	BL	MPX-E (C9-5)
6	+15	OR	MPX-+15 (C9-6)

C5

Pin No.	Pin Name	Wire Color	Destination
1	–7	–	–
2	Vss	BL	FM2-Vss (C2-2)
3	–12	BE	FM2- –12 (C2-3)
4	–15	BR	FM2- –15 (C2-4)
5	E	BL	FM2-E (C2-5)
6	+15	OR	FM2-+15 (C2-6)

C6

Pin No.	Pin Name	Wire Color	Destination
1	–7	–	–
2	Vss	BL	FM-Vss (C2-2)
3	–12	BE	FM1- –12 (C2-3)
4	–15	BR	FM1- –15 (C2-4)
5	E	BL	FM1-E (C2-5)
6	+15	OR	FM1-+15 (C2-6)

C7

Pin No.	Pin Name	Wire Color	Destination
1	–7	GR	KC- –7 (C7-1)
2	Vss	BL	KC-Vss (C7-2)
3	–12	BE	KC- –12 (C7-3)
4	–15	–	–
5	E	BL	KC-E (C7-5)
6	+15	OR	KC-+15 (C7-6)

C8

Pin No.	Pin Name	Wire Color	Destination
1	PSW1	BR	PSW-1
2	PSW2	BR	PSW-2

C9

Pin No.	Pin Name	Wire Color	Destination
1	AC1	SB	CNP-AC1 (C2-1)
2	–	–	–
3	AC2	BR	CNP-AC2 (C2-3)

C10

Pin No.	Pin Name	Wire Color	Destination
1			
2			
3			
4			
5			
6			
7			
8			
9			
10			

C11

Pin No.	Pin Name	Wire Color	Destination
1	–12	BE	RW- –12 (C9-1)
2	PON	PK	RW-PON (C9-2)
3	–7B	VI	RW- –7B (C9-3)

DC Circuit Board & Wiring

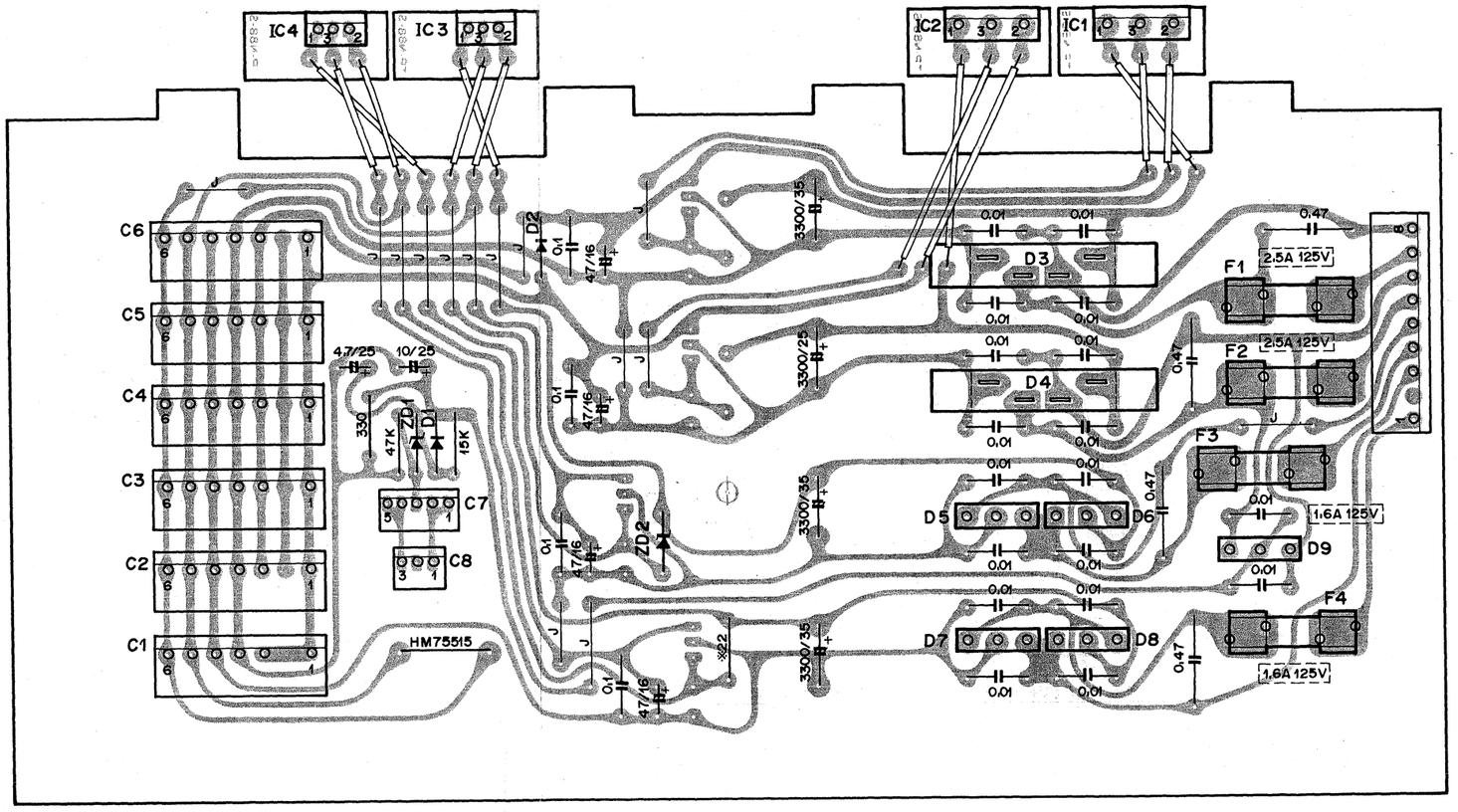

View from the component side of the circuit board

(Notes)
1. Circuit Board : LC86380 [1]
2. Transistor
   Tr1, 2 : 2SB686 (R, O)
   Tr3, 4 : 2SB595 (O, Y)
3. IC
   IC1 : μPC14312H
   IC2 : μPC14305H
   IC3, 4 : μPC14315H
4. Diode
   D1, 2 : 10E-1
   D5, 4 : 5B2
   D5, 7 : 1D2Z1
   D6, 8, 9 : 1D2C1
5. Zener Diode
   ZD1 : RD3.6EB1
   ZD2 : RD6.2EB

Common Model	F1, F2	F3, F4	NA Number
US. American Canadian	(UL) 2.1A 125V	(UL) 1.6A 125V	80746
Japan	2.5A 250V	1.6A 250V	80739
North European General Export	(S) T2.5A 250V	(S) T1.6A 250V	80747

C1

Pin No.	Pin Name	Wire Color	Destination
1	–7	GR	SELL- –7 (C3-2)
2	Vss	–	–
3	–12	BE	SELL- –12 (C1-5)
4	–15	–	–
5	Vss	BL	SELL-Vss (C1-2)
6	+15	–	–

C2

Pin No.	Pin Name	Wire Color	Destination
1	–7	GR	CR-M5V (C2-3)
2	Vss	BL	MK4-Vss (C9-5)
3	–12	BE	CR-MG (C2-1)
4	–15	BR	EQ- –15 (C2-2)
5	E	BL	EQ-E (C2-5)
6	+15	OR	EQ-+15 (C2-3)

C3

Pin No.	Pin Name	Wire Color	Destination
1	–7	GR	STO- –7 (C1-2)
2	Vss	–	–
3	–12	BE	A- –12 (C10-1)
4	–15	BR	A- –15 (C10-2)
5	E	BL	A-E (C10-6)
6	+15	OR	A-+15 (C10-7)

C4

Pin No.	Pin Name	Wire Color	Destination
1	–7	GR	RW- –7 (C8-1)
2	Vss	BL	RW-Vss (C8-2)
3	–12	BE	RW- –12 (C8-3)
4	–15	–	–
5	E	–	–
6	+15	–	–

C5

Pin No.	Pin Name	Wire Color	Destination
1	–7	GR	SELR- –7 (C1-2)
2	Vss	BL	FM-Vss (C2-2)
3	–12	BE	FM- –12 (C2-3)
4	–15	BR	FM- –15 (C2-6)
5	E	BL	FM-E (C2-5)
6	+15	OR	FM-+15 (C2-4)

C6

Pin No.	Pin Name	Wire Color	Destination
1	–7	GR	KC- –7 (C7-1)
2	Vss	BL	KC-Vss (C7-2)
3	–12	BE	KC- –12 (C7-3)
4	–15	–	–
5	E	BL	KC-E (C7-5)
6	+15	OR	KC-+15 (C7-6)

C7

Pin No.	Pin Name	Wire Color	Destination
1	–12	BE	RW- –12 (C9-1)
2	–	–	–
3	PON	GR	RW-PON (C9-2)
4	–	–	–
5	–7B	VI	RW- –7B (C9-3)

C8

Pin No.	Pin Name	Wire Color	Destination
1	–12	BE	BB UNIT ⊖
2	–	–	–
3	–7B	VI	BB UNIT ⊕

AC Circuit Board & Wiring

AC (General Export Model)

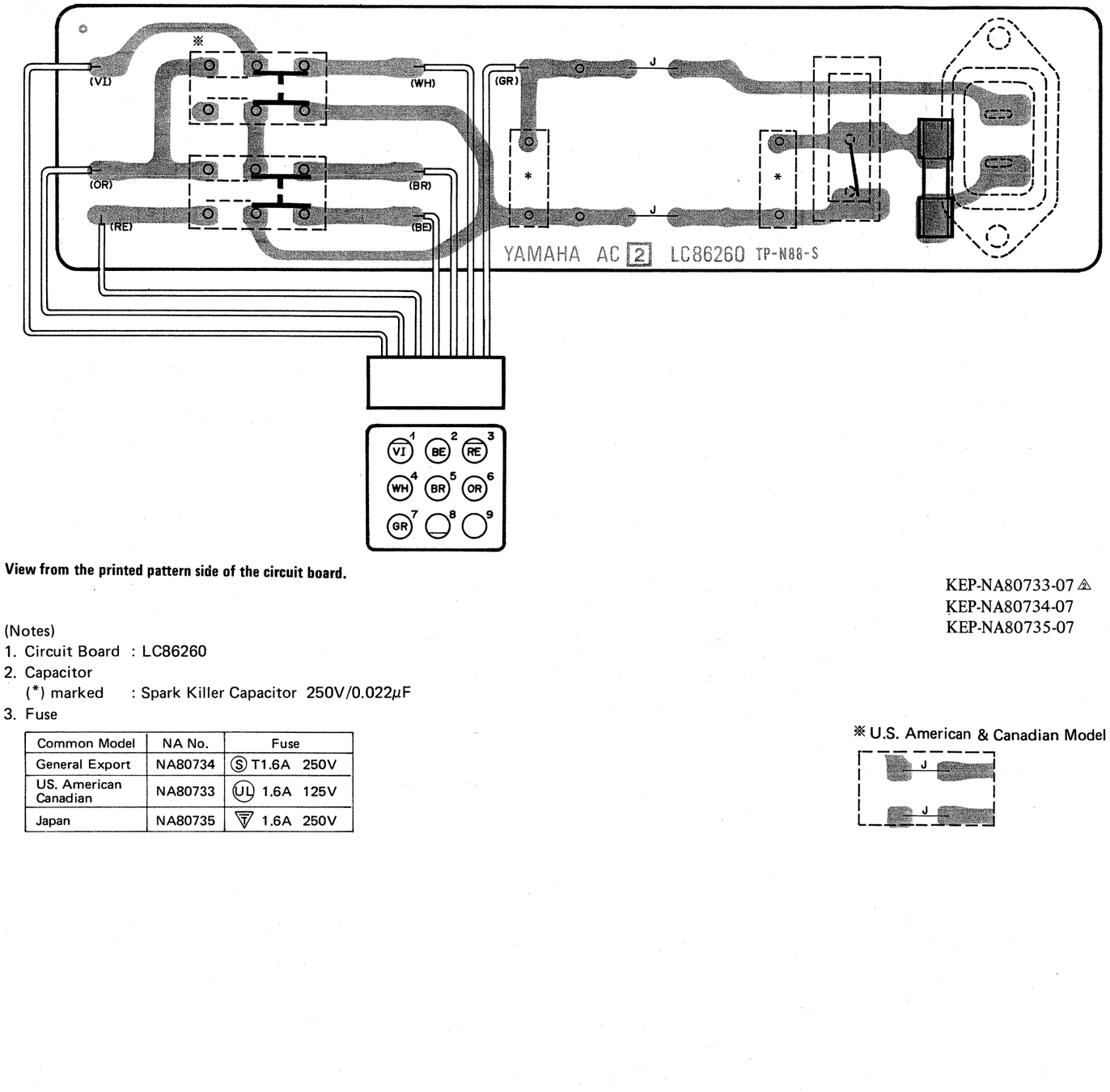

View from the printed pattern side of the circuit board.

(Notes)
1. Circuit Board : LC86260
2. Capacitor
   (*) marked : Spark Killer Capacitor 250V/0.022μF
3. Fuse

Common Model	NA No.	Fuse
General Export	NA80734	Ⓢ T1.6A 250V
US. American Canadian	NA80733	Ⓤ 1.6A 125V
Japan	NA80735	▽ 1.6A 250V

KEP-NA80733-07 ⚠
KEP-NA80734-07
KEP-NA80735-07

※ U.S. American & Canadian Model

PN (EQ, SEL-R, SEL-L, TET) Circuit Board & Wiring

EQ

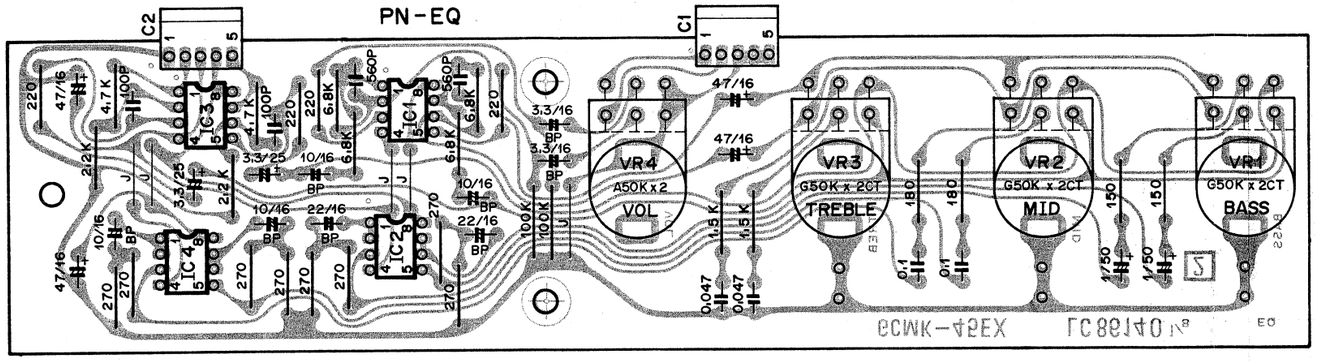

View from the component side of the circuit board

C1

Pin No.	Pin Name	Wire Color	Destination
1	EQI2	S YE	A-EO2 (C5-10)
2	EQI1	S OR	A-EO1 (C5-6)
3	E	–	–
4	E	–	–
5	E	BL	EQ-EP

C2

Pin No.	Pin Name	Wire Color	Destination
1	E	BL	CNB-E (C1-4)
2	EQO1	S RE	A-TRMI1 (C4-7)
3	–15	BR	CNB- –15 (C1-2)
4	+15	OR	CNB-+15 (C1-6)
5	EQO2	S BR	A-TRMI2 (C4-5)

(Notes)
1. Circuit Board : LC86140 [2] 1/7
2. IC
   IC1 ~ 4 : NJM4558DV
3. Connector
   C1, 2 : NH Connector 5P (B, E)

KEP-NA80702-04 ⚠

SEL-L

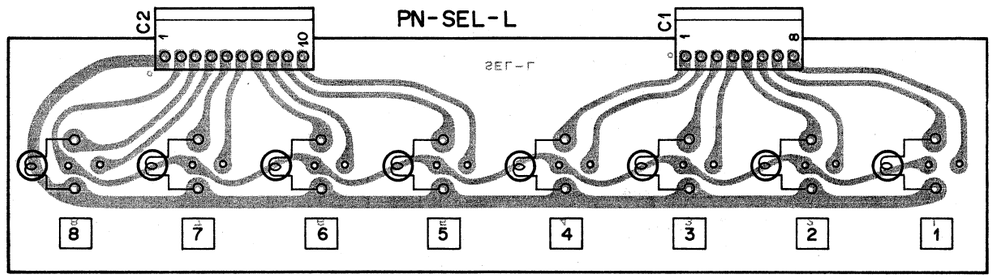

View from the component side of the circuit board

C1

Pin No.	Pin Name	Wire Color	Destination
1	L4	GY	RW-L4 (C1-8)
2	S4	VI	RW-S4 (C1-7)
3	L3	BE	RW-L3 (C1-6)
4	S3	GR	RW-S3 (C1-5)
5	L2	YE	RW-L2 (C1-4)
6	S2	OR	RW-S2 (C1-3)
7	L1	RE	RW-L1 (C1-2)
8	S1	BR	RW-S1 (C1-1)

C2

Pin No.	Pin Name	Wire Color	Destination
1	Vss	BL	RW-Vss (C2-10)
2	STO	GG	RW-STO (C2-9)
3	L8	GY	RW-L8 (C2-8)
4	S8	VI	RW-S8 (C2-7)
5	L7	BE	RW-L7 (C2-6)
6	S7	GR	RW-S7 (C2-5)
7	L6	YE	RW-L6 (C2-4)
8	S6	OR	RW-S6 (C2-3)
9	L5	RE	RW-L5 (C2-2)
10	S5	BR	RW-S5 (C2-1)

(Notes)
1. Circuit Board : LC86140 [2] 3/7
2. Connector
   C1 : NH Connector 8P (B, E)
   C2 : NH Connector 10P (B, E)

KEP-NA80705-04 ⚠

SEL-R

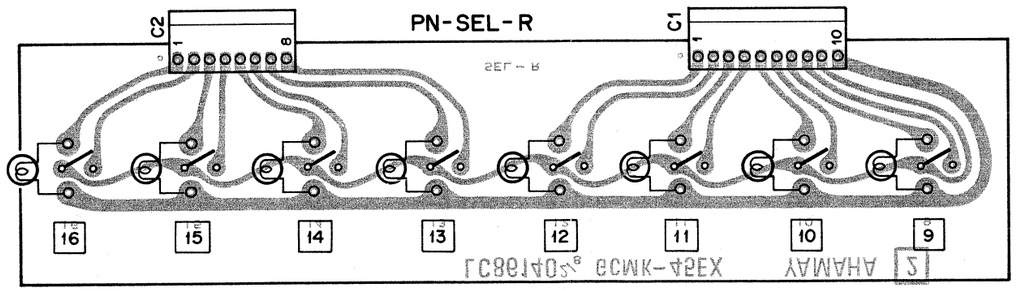

View from the component side of the circuit board

C1

Pin No.	Pin Name	Wire Color	Destination
1	L12	GY	RW-L12 (C3-8)
2	S4	VI	RW-S4 (C3-7)
3	L11	BE	RW-L11 (C3-6)
4	S3	GR	RW-S3 (C3-5)
5	L10	YE	RW-L10 (C3-4)
6	S2	OR	RW-S2 (C3-3)
7	L9	RE	RW-L9 (C3-2)
8	S1	BR	RW-S1 (C3-1)
9	ST1	PK	RW-ST1 (C4-9)
10	Vss	BL	RW-Vss (C4-10)

C2

Pin No.	Pin Name	Wire Color	Destination
1	L16	GY	RW-L16 (C4-8)
2	S8	VI	RW-S8 (C4-7)
3	L15	BE	RW-L15 (C4-6)
4	S7	GR	RW-S7 (C4-5)
5	L14	YE	RW-L14 (C4-4)
6	S6	OR	RW-S6 (C4-3)
7	L13	RE	RW-L13 (C4-2)
8	S5	BR	RW-S5 (C4-1)

(Notes)
1. Circuit Board : LC86140 [2] 2/7
2. Connector
   C1 : NH Connector 10P (B, E)
   C2 : NH Connector 8P (B, E)

KEP-NA80703-04 ⚠

TET

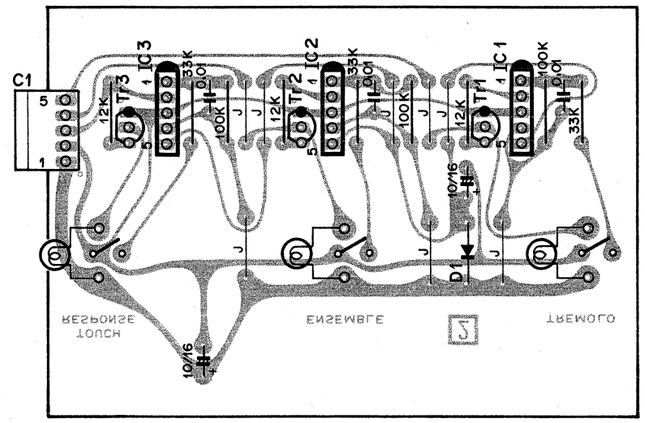

View from the component side of the circuit board

C1

Pin No.	Pin Name	Wire Color	Destination
1	Vss	BL	CNB-Vss (C6-3)
2	–12	BE	CNB- –12 (C6-1)
3	TRS	RE	KC-PS2 (C3-2)
4	ENS	GR	A-ENSS (C5-8)
5	TRM	BE	A-TRMSW (C6-6)

(Notes)
1. Circuit Board : LC86140 [2] 4/7
2. Transistors
   Tr1 ~ 3 : 2SC509 (O, Y)
3. IC
   IC1 ~ 3 : BA634
4. Diode
   D1 : 1S1555 (1S2473)
5. Connector
   C1 : NH Connector 5P (B, E)

KEP-NA80705-04 ⚠

PN (CN, DET, EFF) Circuit Board & Wiring

CN

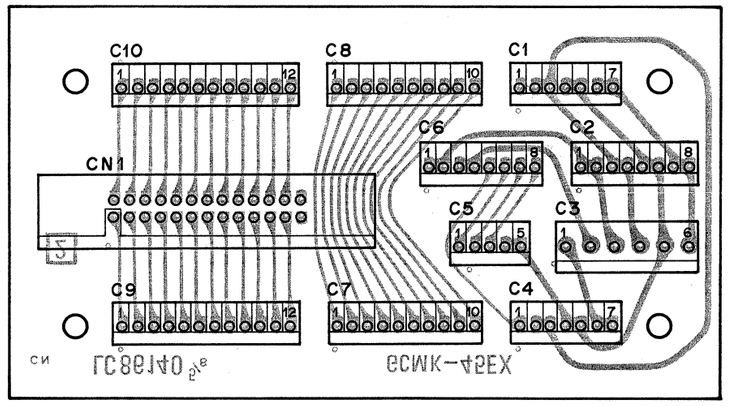

View from the component side of the circuit board

(Notes)
1. Circuit Board : LC86140 [2] 5/7
2. Connector
   - C1, 4 : NH Connector 7P (T, E)
   - C2, 6 : NH Connector 8P (T, E)
   - C5 : NH Connector 5P (T, E)
   - C7, 8 : NH Connector 10P (T, E)
   - C9, 10 : NH Connector 12P (T, E)
   - C3 : Connector 6P (T, E) 3.96 mm
   - CN1 : Bracket cable connector 26P (T, E)

C1

Pin No.	Pin Name	Wire Color	Destination
1	–	–	–
2	–15	BR	EQ- –15 (C2-3)
3	–15	–	–
4	E	BL	EQ-E (C2-1)
5	E	–	–
6	+15	OR	EQ-+15 (C2-4)
7	+15	–	–

C2

Pin No.	Pin Name	Wire Color	Destination
1	–12	BE	A- –12 (C10-1)
2	–12	–	–
3	–15	BR	A- –15 (C10-2)
4	–15	–	–
5	E	BL	A-E (C10-6)
6	E	–	–
7	+15	OR	A-+15 (C10-7)
8	+15	–	–

C3

Pin No.	Pin Name	Wire Color	Destination
1	15S	RE	DC-+15S (C1-6)
2	Vss	BL	DC-Vss (C2-2)
3	–12	BE	DC- –12 (C2-3)
4	–15	BR	DC- –15 (C2-4)
5	E	BL	DC-E (C2-5)
6	+15	OR	EC-+15 (C2-6)

KEP-NA80706-04 ⚠

DET

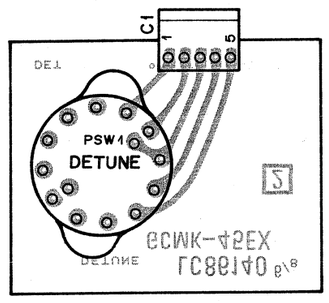

View from the component side of the circuit board

(Notes)
1. Circuit Board : LC86140 [2] 6/7
2. PSW1 : Rotary SW SRM-125
3. Connector
   - C1 : NH Connector 5P (B, E)

C1

Pin No.	Pin Name	Wire Color	Destination
1	SD2	GR	KC-DP3 (C3-5)
2	SD1	OR	KC-DP1 (C3-3)
3	Vss	BL	KC-PS2 (C1-1)
4	RD1	BE	KC-RP1 (C3-6)
5	RD2	VI	KC-RP2 (C3-7)

KEP-NA80707-04 ⚠

EFF

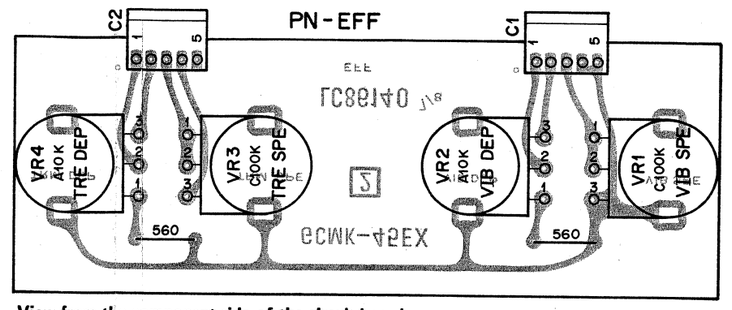

View from the component side of the circuit board

C1

Pin No.	Pin Name	Wire Color	Destination
1	VDD	GR	A-V1BDI (C9-4)
2	VDI	BE	A-V1BDO (C9-7)
3	VSI	VI	A-V1BSP (C9-1)
4	E	BL	A-E (C7-5)
5	E	–	–

(Notes)
1. Circuit Board : LC86140 [2] 7/7
2. Connector
   - C1, 2 : NH Connector 5P (B, E)

C2

Pin No.	Pin Name	Wire Color	Destination
1	TDO	BR	A-TRMDI (C6-8)
2	TDI	RE	A-TRMDO (C6-1)
3	TSO	OR	A-TRMDI (C6-2)
4	TSI	YE	A-TRMSO (C6-5)
5	–	–	–

KEP-NA80708-04 ⚠

PN (EQ, SEL-R, SEL-L, EFF, STO) Circuit Board & Wiring

EQ View from the pattern side of the circuit board

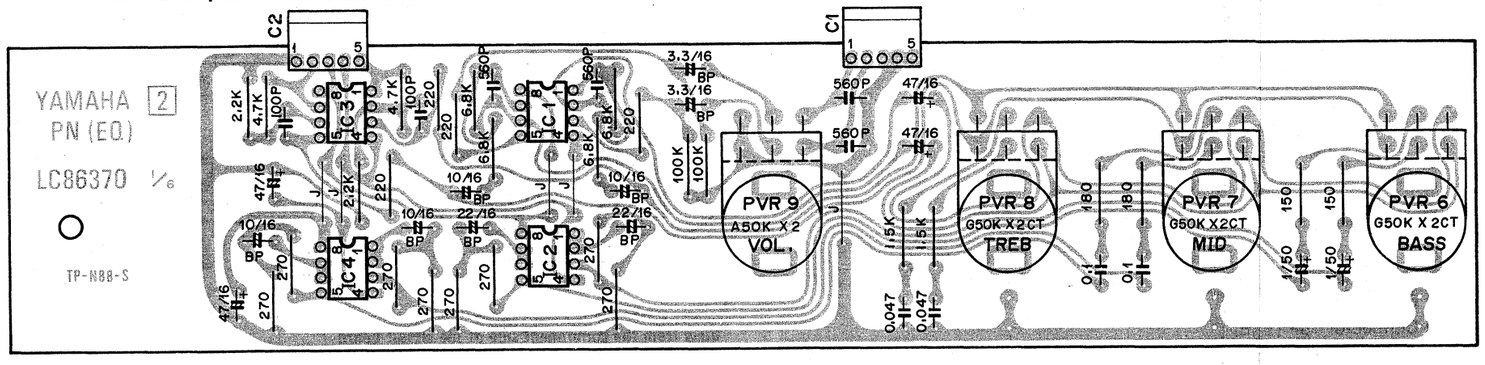

C1

Pin No.	Pin Name	Wire Color	Destination
1	E	–	–
2	E	–	–
3	E	–	–
4	EO1	S OR	A-EO1 (C5-6)
5	EO2	S YE	A-EO2 (C5-10)

C2

Pin No.	Pin Name	Wire Color	Destination
1	TRMI2	S BR	A-TRMI2 (C4-5)
2	–15	BR	DC- –15 (C2-4)
3	+15	OR	DC-+15 (C2-6)
4	TRMI1	S RE	A-TRMI1 (C4-7)
5	E	BL	DC-E (C2-5)

(Notes)
1. Circuit Board : LC86370 2
2. IC :
   IC1 ~ 4 : NJM4558

STO View from the pattern side of the circuit board

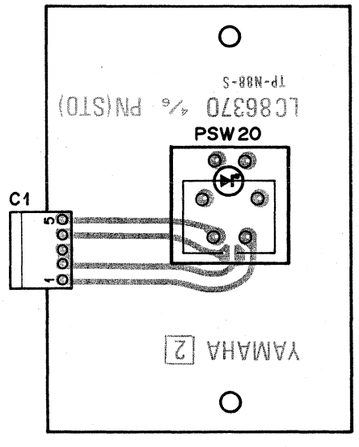

C1

Pin No.	Pin Name	Wire Color	Destination
1	WRT	WH	RW-WRT (C1-9)
2	–7	GR	DC- –7 (C3-1)
3	–	–	–
4	STRD	BR	RW-STRD (C7-1)
5	–12	BE	LOCK SW-LOCK terminal

SEL-R View from the pattern side of the circuit board

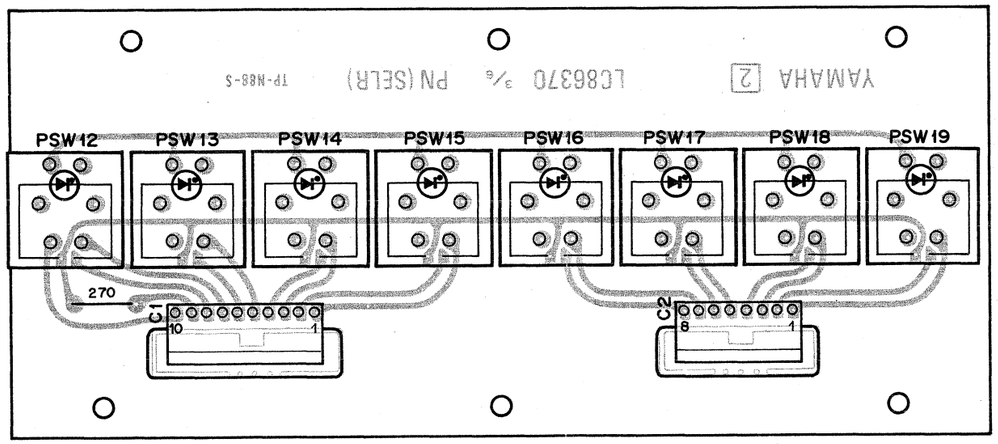

C1

Pin No.	Pin Name	Wire Color	Destination
1	ST1	PK	RW-ST1 (C4-9)
2	–7	GR	DC- –7 (C5-1)
3	L9	RE	RW-L9 (C3-2)
4	S1	BR	RW-S1 (C3-1)
5	L10	YE	RW-L10 (C3-4)
6	S2	OR	RW-S2 (C3-3)
7	L11	BE	RW-L11 (C3-6)
8	S3	GR	RW-S3 (C3-5)
9	L12	GY	RW-L12 (C3-8)
10	S4	VI	RW-S4 (C3-7)

C2

Pin No.	Pin Name	Wire Color	Destination
1	L13	RE	RW-L13 (C4-2)
2	S5	BR	RW-S5 (C4-1)
3	L14	YE	RW-L14 (C4-4)
4	S6	OR	RW-S6 (C4-3)
5	L15	BE	RW-L15 (C4-6)
6	S7	GR	RW-S7 (C4-5)
7	L16	GY	RW-L16 (C4-8)
8	S8	VI	RW-S8 (C4-7)

(Note)
1. Circuit Board : LC86370 2

EFF

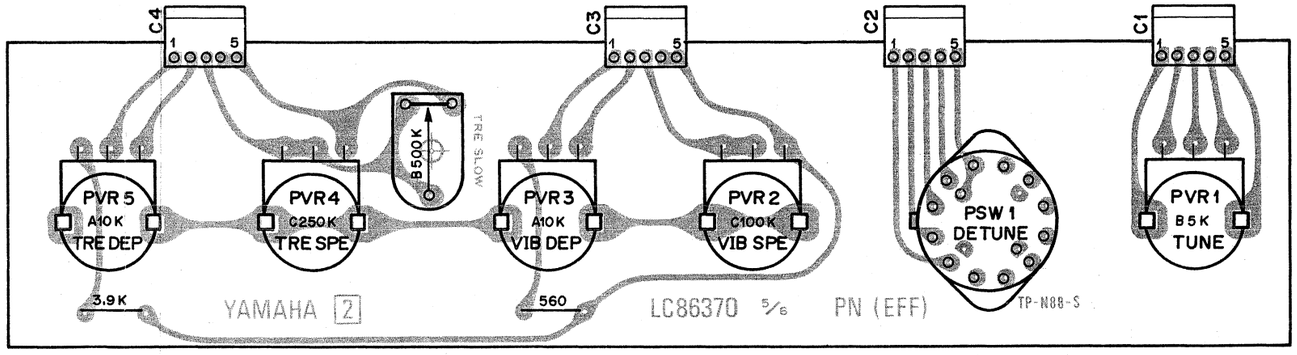

View from the pattern side of the circuit board

C1

Pin No.	Pin Name	Wire Color	Destination
1	E	BL	A-E (C7-5)
2	PC3	GR	A-PC3 (C7-1)
3	PC2	OR	A-PC2 (C7-3)
4	PC1	YE	A-PC1 (C7-4)
5	E	BL	EFF-E (C1-1)

C2

Pin No.	Pin Name	Wire Color	Destination
1	Vss	BL	KC-Vss (C1-1)
2	DP1	OR	KC-DP1 (C3-3)
3	DP3	GR	KC-DP3 (C3-5)
4	–	–	–
5	–	–	–

C3

Pin No.	Pin Name	Wire Color	Destination
1	–	–	–
2	E	BL	PIT-C1-5
3	VIBSP	VI	A-VIBSP (C9-1)
4	VIBDO	BE	A-VIBDO (C9-7)
5	VIBDI	GR	A-VIBDI (C9-4)

C4

Pin No.	Pin Name	Wire Color	Destination
1	–	–	–
2	TRMSO	YE	A-TRMSO (C6-5)
3	TRMSI	OR	A-TRMSI (C6-2)
4	TRMDO	RE	A-TRMDO (C6-1)
5	TRMDI	BR	A-TRMDI (C6-8)

(Note)
1. Circuit Board : LC86370 2

SEL-L

View from the pattern side of the circuit board

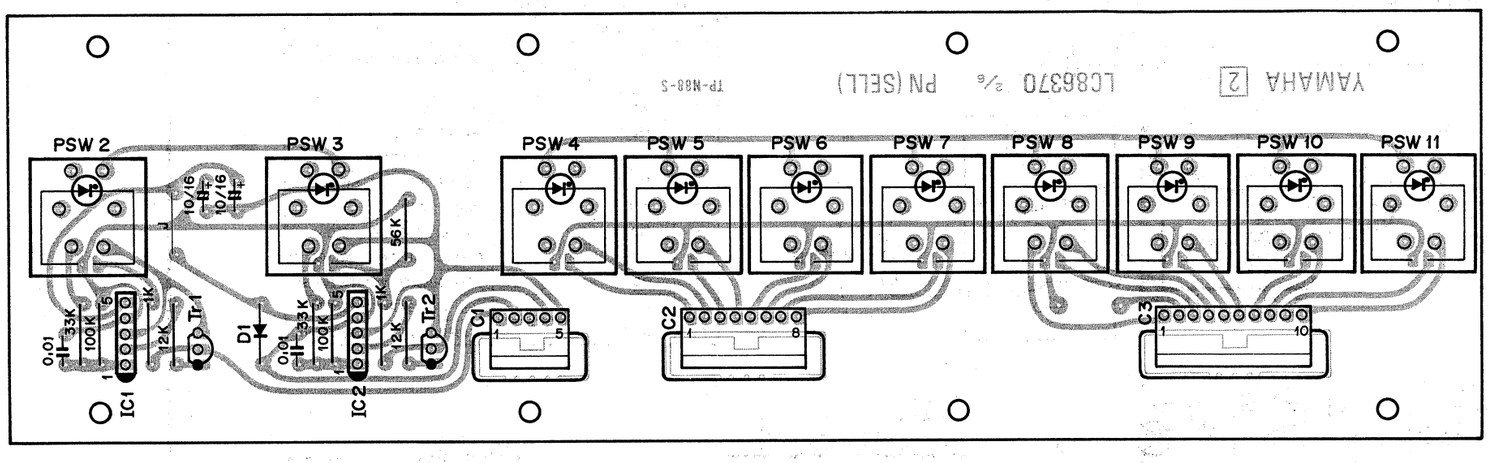

C1

Pin No.	Pin Name	Wire Color	Destination
1	TRMSW	BE	A-TRMSW (C6-7)
2	Vss	BL	DC-Vss (C1-5)
3	–	–	–
4	ENSS	GR	A-ENSS (C5-8)
5	–12	BE	DC- –12 (C1-3)

C2

Pin No.	Pin Name	Wire Color	Destination
1	L1	RE	RW-L1 (C1-2)
2	S1	BR	RW-S1 (C1-1)
3	L2	YE	RW-L2 (C1-4)
4	S2	OR	RW-S2 (C1-3)
5	L3	BE	RW-L3 (C1-6)
6	S3	GR	RW-S3 (C1-5)
7	L4	GY	RW-L4 (C1-8)
8	S4	VI	RW-S4 (C1-7)

C3

Pin No.	Pin Name	Wire Color	Destination
1	STO	GG	RW-STO (C2-9)
2	–7	GR	DC- –7 (C1-1)
3	L5	RE	RW-L5 (C2-2)
4	S5	BR	RW-S5 (C2-1)
5	L6	YE	RW-L6 (C2-4)
6	S6	OR	RW-S6 (C2-3)
7	L7	BE	RW-L7 (C2-6)
8	S7	GR	RW-S7 (C2-5)
9	L8	GY	RW-L8 (C2-8)
10	S8	VI	RW-S8 (C2-7)

(Notes)

1. Circuit Board : LC86370 [2]
2. IC
   IC1, 2 : BA634
3. Tr
   Tr1, 2 : 2SC509
4. Diode
   D : 1S1555

Other Circuit Boards & Wiring

GS1

CNB

C4

Pin No.	Pin Name	Wire Color	Destination
1	IC	GY	PCA-IC (C3-6)
2	–15	–	–
3	–15	BR	PCA- –15 (C2-1)
4	E	–	–
5	E	BL	PCA-E (C2-3)
6	15S	–	–
7	15S	RE	PCA-+15 (C2-5)

C5

Pin No.	Pin Name	Wire Color	Destination
1	DAMP	WH	CNP-DAMP (C3-1)
2	TRM	GY	CNP-TREM (C3-2)
3	V1B	GG	CNP-V1B (C3-3)
4	E	BL	CNP-E (C3-4)
5	E	BL	CNP-E (C3-5)

C6

Pin No.	Pin Name	Wire Color	Destination
1	–12	BE	TET- –12 (C1-2)
2	–12	–	–
3	Vss	BL	TET-Vss (C1-1)
4	Vss	–	–
5	IC	GY	A-IC (C5-3)
6	DAMP	WH	KC-DAMP (C3-9)
7	TRM	GR	A-TRMPD (C6-7)
8	V1B	GG	A-V1B (C9-2)

C7

Pin No.	Pin Name	Wire Color	Destination
1	LIN	VI	A-LIN (C4-3)
2	EXP	BE	A-EXP (C4-1)
3	PC1	YE	A-PC1 (C7-4)
4	PC2	OR	A-PC2 (C7-3)
5	PC3	GR	A-PC3 (C7-1)
6	WRITE	WH	RW-WRITE (C1-9)
7	–12	BE	RW- –12 (C1-10)
8	PLK	SB	RW-PLK (C3-9)
9	S1	BB	RW-S1 (C3-10)
10	–	–	–

C8

Pin No.	Pin Name	Wire Color	Destination
1	LIN	BR	CNX-LIN (C1-1)
2	EXP	RE	CNX-EXP (C1-2)
3	PC1	OR	CNX-PC1 (C1-3)
4	PC2	YE	CNX-PC2 (C1-4)
5	PC3	GR	CNX-PC3 (C1-5)
6	WRITE	BE	CNX-WRITE (C1-6)
7	–12	BE	CNX- –12 (C1-7)
8	PLK	SB	CNX-PLK (C1-8)
9	S1	–	–
10	–	–	–

C9

Pin No.	Pin Name	Wire Color	Destination
1	G	BR	CNX-G (C3-1)
2	G	RE	CNX-G (C3-2)
3	G	OR	CNX-G (C3-3)
4	READY	YE	CNS-READY (C3-4)
5	$\overline{CMD1}$	GR	CNX-$\overline{CMD1}$ (C3-5)
6	G	BE	CNX-G (C3-6)
7	G	VI	CNX-G (C3-7)
8	$\overline{CTRL1}$	GY	CNX-$\overline{CTRL1}$ (C3-8)
9	D1A	WH	CNX-D1A (C3-9)
10	D2A	GG	CNX-D2A (C3-10)
11	D3A	SB	CNX-D3A (C3-11)
12	D4A	PK	CNX-D4A (C3-12)

C10

Pin No.	Pin Name	Wire Color	Destination
1	ϕA	BR	CNX-ϕA (C4-1)
2	ϕB	RE	CNX-ϕB (C4-2)
3	$\overline{BUSY}$	OR	CNX-$\overline{BUSY}$ (C4-3)
4	$\overline{CMD0}$	YE	CNX-$\overline{CMD0}$ (C4-4)
5	$\overline{CMD2}$	GR	CNX-$\overline{CMD2}$ (C4-5)
6	$\overline{COMR}$	BE	CNX-$\overline{COMR}$ (C4-6)
7	$\overline{CTRLO}$	VI	CNX-$\overline{CTRLO}$ (C4-7)
8	$\overline{EXT}$	GY	CNX-$\overline{EXT}$ (C4-8)
9	$\overline{D2M}$	WH	CNX-$\overline{D2M}$ (C4-9)
10	$\overline{D3M}$	GG	CNX-$\overline{D3M}$ (C4-10)
11	$\overline{D4M}$	SB	CNX-$\overline{D4M}$ (C4-11)
12	G	PK	CNX-G (C4-12)

BB

C1

Pin No.	Pin Name	Wire Color	Destination
1	–12	BE	DC- –12 (C12-1)
2	–	–	–
3	–7B	VI	DC- –7B (C12-3)

GS2

BB

C1

Pin No.	Pin Name	Wire Color	Destination
1			
2	–12	BE	DC- –12 (C8-1)
3	–	–	–
4	–7B	VI	DC- –7B (C8-3)

PGM

CN No.	CN Name	Destination
CN1	24P connector	(to RW-CN5)

LOCK

Pin No.	Pin Name	Wire Color	Destination
1	CENTER TERMINAL	WH	RW-PLK (C3-9)
2	LOCK TERMINAL	BE	RW- –12 (C1-10)
3		BE	STO- –12 (C1-5)

CARD READER UNIT Circuit Diagram

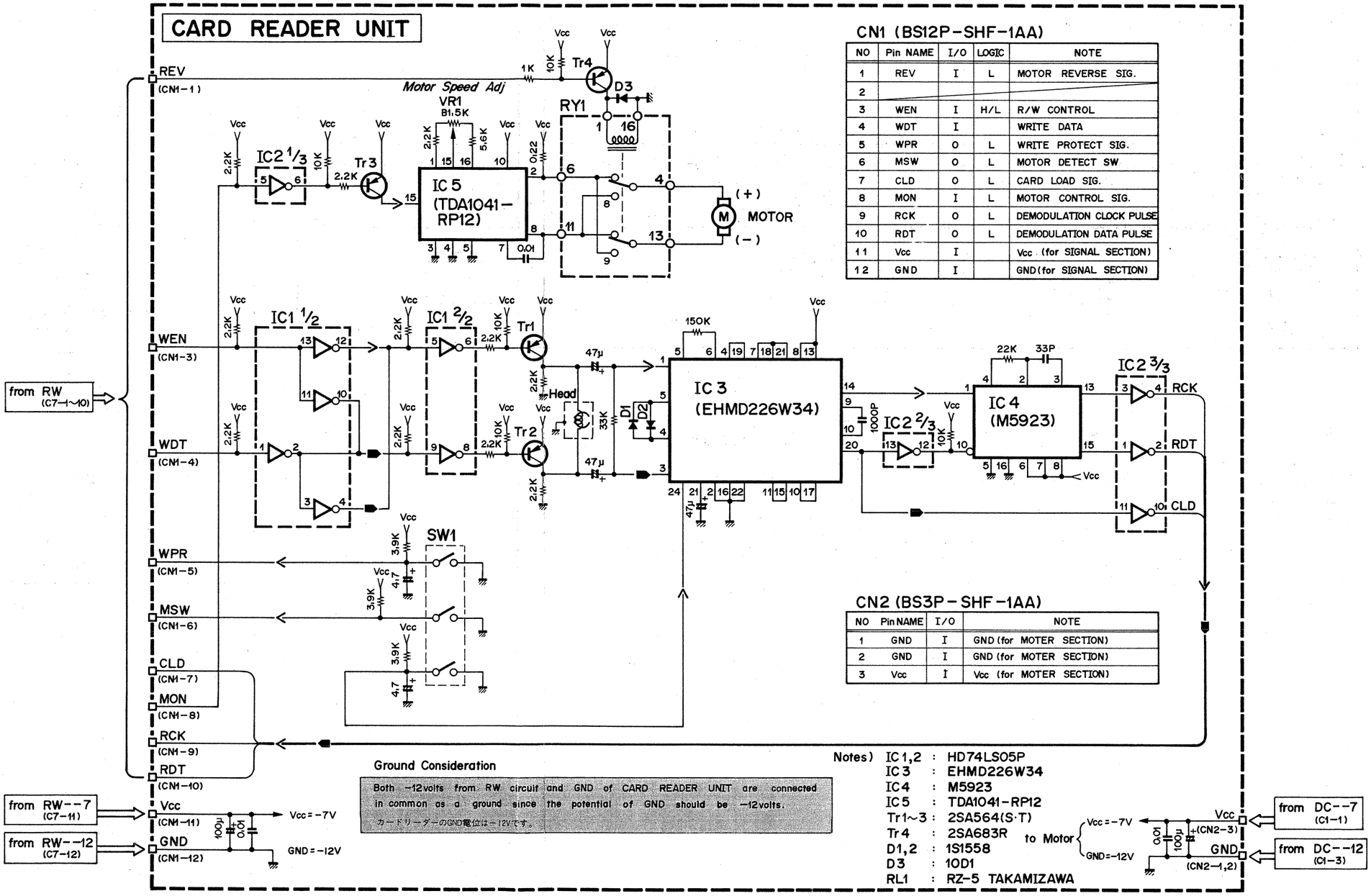

CN1 (BS12P-SHF-1AA)

NO	Pin NAME	I/O	LOGIC	NOTE
1	REV	I	L	MOTOR REVERSE SIG.
2				
3	WEN	I	H/L	R/W CONTROL
4	WDT	I		WRITE DATA
5	WPR	O	L	WRITE PROTECT SIG.
6	MSW	O	L	MOTOR DETECT SW
7	CLD	O	L	CARD LOAD SIG.
8	MON	I	L	MOTOR CONTROL SIG.
9	RCK	O	L	DEMODULATION CLOCK PULSE
10	RDT	O	L	DEMODULATION DATA PULSE
11	Vcc	I		Vcc (for SIGNAL SECTION)
12	GND	I		GND(for SIGNAL SECTION)

CN2 (BS3P-SHF-1AA)

NO	Pin NAME	I/O	NOTE
1	GND	I	GND (for MOTER SECTION)
2	GND	I	GND (for MOTER SECTION)
3	Vcc	I	Vcc (for MOTER SECTION)

CARD READER UNIT Circuit Board & Wiring

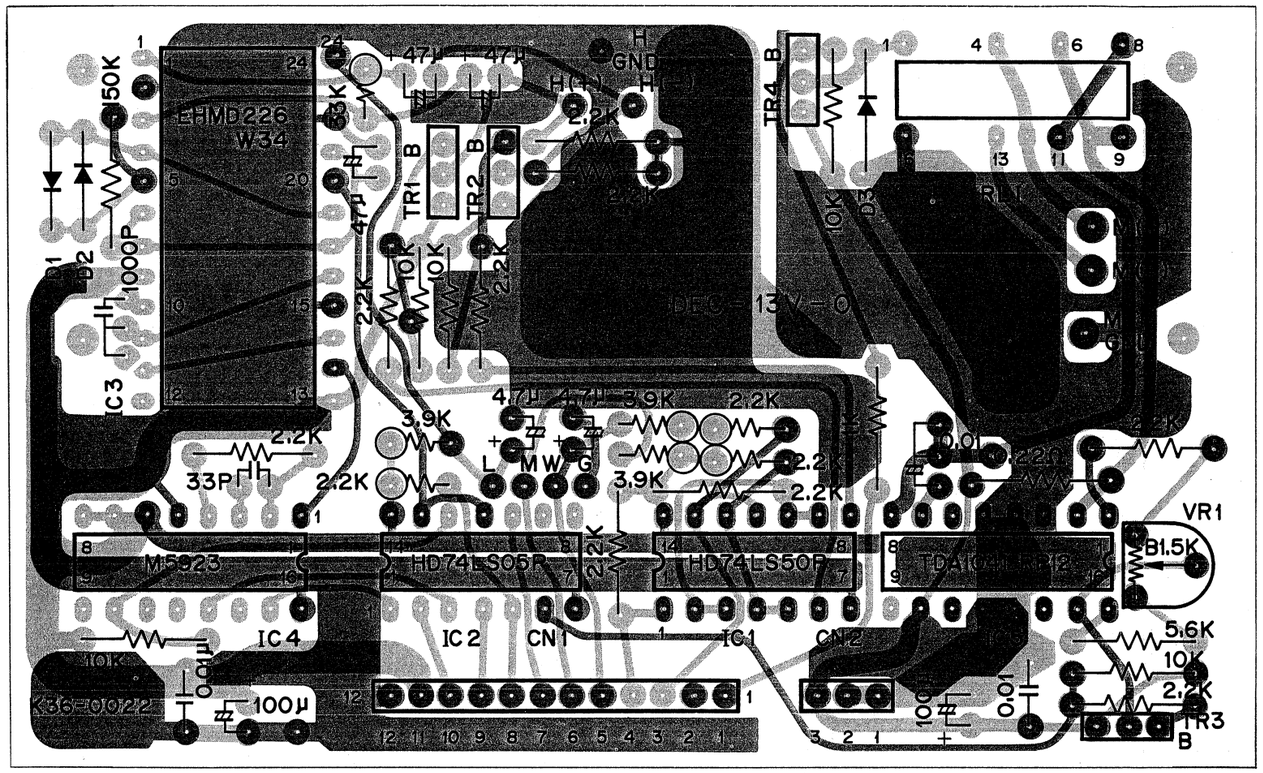

C1

Pin No.	Pin Name	Wire Color	Destination
1	REV	RE	RW-REV (C7-2)
2	–	–	–
3	WEN	GR	RW-WEN (C7-5)
4	WDT	BE	RW-WDT (C7-6)
5	WPR	YE	RW-WPR (C7-4)
6	MSW	OR	RW-MSW (C7-3)
7	CLD	VI	RW-CLD (C7-7)
8	MON	GY	RW-MON (C7-8)
9	RCK	WH	RW-RCK (C7-9)
10	RDT	GG	RW-RDK (C7-10)
11	+5V	GR	RW-–7 (C7-11)
12	GND	BE	RW-–12 (C7-12)

C2

Pin No.	Pin Name	Wire Color	Destination
1	MG	BE	DC-–12 (C1-3)
2	MG	–	–
3	M5V	GR	DC-–7 (C1-1)

C1

Pin No.	Pin Name	Wire Color	Destination
1	REV	RE	RW-REV (C7-2)
2	–	–	–
3	WEN	GR	RW-WEN (C7-5)
4	WDT	RE	RW-WDT (C7-6)
5	WPR	YE	RW-WPR (C7-4)
6	MSW	OR	RW-MSW (C7-3)
7	CLD	VI	RW-CLD (C7-7)
8	MON	GY	RW-MON (C7-8)
9	RCK	WH	RW-RCK (C7-9)
10	RDT	GG	RW-RDI (C7-10)
11	+5V	GR	RW-–7 (C7-11)
12	GND	RE	RW-–12 (C7-12)

C2

Pin No.	Pin Name	Wire Color	Destination
1	MG	BE	DC-–12 (C2-3)
2	MG	–	–
3	M5V	GR	DC-–7 (C2-1)

YAMAHA

GS1

PARTS LIST

CONTENTS

A. Electronic Components (電気部品)..... 1
B. Cabinet (外装)..... 6
C. Pedal Assembly (ペダルAss'y)..... 8
D. D Rack & Power Supply Unit (Dラック及び電源ユニット)..... 10
E. Keyboard Assembly (鍵盤)..... 12
F. CNX Plate (CNX プ レ ー ト)..... 14
G. Control Panel & Top Board Assembly (コントロールパネル及び屋根)..... 16

Printed in Japan

A. Electronic Components (電気部品)

	Ref. No.	Part No.	Description		部品名	Remarks	Common Model	Markets
※		NA 80 69 20	Circuit Board	FM #8605	F M シート		GS2	
※		NA 80 69 30	– do. –	KC #8606	K C シート		GS2	
※		NA 80 69 40	– do. –	MPX #8607	M P X シート			
※		NA 80 69 50	– do. –	RW #8608	R W シート			
※		NA 80 69 60	– do. –	A #8609	A シート		GS2	
※		NA 80 69 70	– do. –	MK1 #8610	M K 1 シート			
※		NA 80 69 80	– do. –	MK2 #8611	M K 2 シート			
※		NA 80 70 10	– do. –	DC #8615	D C シート			J
※		NA 80 74 40	– do. –	DC #8615	〃			U;C
※		NA 80 74 50	– do. –	DC #8615	〃			G
※		NA 80 70 20	– do. –	PN-EQ #8614	PN-EQ シート			
※		NA 80 70 30	– do. –	PN-SEL-R #8614	PN-SEL-Rシート			
※		NA 80 70 40	– do. –	PN-SEL-L #8614	PN-SEL-Lシート			
※		NA 80 70 50	– do. –	PN-TET #8614	PN-TET シート			
※		NA 80 70 60	– do. –	PN-CNB #8614	PN-CNB シート			
※		NA 80 70 70	– do. –	PN-DEF #8614	PN-DEF シート			
※		NA 80 70 80	– do. –	PN-EFF #8614	PN-EFF シート			
		iG 00 11 80	IC	TC4013BP	IC	D Flip-Flop		
		iG 00 12 40	– do. –	TC4011BP	〃	2-input NAND		
		iG 00 12 50	– do. –	TC4027BP	〃	J-K Flip-Flop		
		iG 00 13 90	– do. –	NJM4558DV	〃	OP. Amp		
		iG 00 16 90	– do. –	TC4016BP	〃	Bilateral SW		
		iG 00 17 20	– do. –	TC4069UBP	〃	Inverter		
		iG 00 17 70	– do. –	TC4051BP	〃	8ch Multiplexer		
		iG 00 18 40	– do. –	HD7400	〃	2-input NANDx4		
		iG 02 60 00	– do. –	#02600	〃	VCA		
		iG 02 68 10	– do. –	HD74LS20P	〃	4-input NANDx2		
		iG 02 69 10	– do. –	HD74LS00P	〃	2-input NANDx4		
		iG 02 70 00	– do. –	HD7404P	〃	Inverter		
		iG 02 70 10	– do. –	HD74LS04P	〃	Inverter		
		iG 02 87 00	– do. –	μPC14315H	〃	+15V Regulator		
		iG 03 29 00	– do. –	iG03290	〃	BBD Driver		
※		iG 03 32 00	– do. –	μPC14312H	〃	+12V Regulator		
※		iG 03 33 00	– do. –	μPC14305H	〃	+5V – do. –		
※		iG 03 34 00	– do. –	μPC311C	〃	Voltage Comparator		
※		iG 03 35 00	– do. –	μPC610D	〃	10 bit D/A Convertor		
※		iG 03 36 00	– do. –	μPC624	〃	8 bit – do. –		
		iG 03 55 00	– do. –	TC4028BP	〃	Decoder		
		iG 03 81 00	– do. –	TC4024BP	〃	Counter		
※		iG 04 35 00	– do. –	TC40161BP	〃	Programmable 4 bit Counter		
※		iG 04 37 00	– do. –	HD74LS08P	〃	AND		
※		iG 04 38 00	– do. –	HD7417P	〃	Buffer		
※		iG 04 40 00	– do. –	HD74LS74AP	〃	D Flip-Flop		
※		iG 04 42 00	– do. –	HD74LS138P	〃	Decoder/Demultiplexer		
※		iG 04 43 00	– do. –	HD74145P	〃	BCD to Decimal Decoder		
※		iG 04 44 00	– do. –	HD74LS161P	〃	Synchronous 4 bit Counter		
※		iG 04 45 00	– do. –	HD74LS240P	〃	Bufferx8		
※		iG 04 46 00	– do. –	SN74LS245	〃	Octal Bus Transceivers		
※		iG 04 47 00	– do. –	SN74LS273	〃	Octal D Flip-Flop		
※		iG 04 48 00	– do. –	SN75366N	〃	NAND(TTL to MOS)		
※		iG 04 49 00	– do. –	μPD8035	〃	CPU		
		iG 04 50 00	– do. –	μPD8243	〃	I/O EXP		

※ New Parts (新規部品) (J : Japan, U : US.American, C : Canadian, G : General)

	Ref. No.	Part No.	Description	部品名	Remarks	Common Model	Markets
※		iG 04 52 00	IC TC5516P	I C	2Kx8 bit RAM		
※		iG 04 53 00	– do. – TC4009UBP	〃	Inverter		
※		iG 04 61 00	– do. – MN3009	〃	256 Stage BBD		
※		iG 04 80 00	– do. – HD74LS366	〃	Bus Driver		
※		iG 04 83 00	– do. – HD7416P	〃	Inverter		
		iG 05 28 00	– do. – TC40H032P	〃	2-input OR x 4		
※		iT 31 10 00	– do. – YM311	〃	KC		
※		iT 31 20 00	– do. – YM312	〃	CP		
※		iT 31 60 00	– do. – YM316	〃	ACC		
※		iT 31 80 00	– do. – YM318	〃	MPX		
※		iT 32 00 00	– do. – YM320	〃	IG		
※		iT 32 10 00	– do. – YM321	〃	EG		
※		iT 32 20 00	– do. – YM322	〃	EC		
※		iT 32 70 00	– do. – YM327	〃	ADD		
※		iT 33 40 00	– do. – YM334	〃	AG		
※		iT 34 40 00	– do. – YM344	〃	PG		
※		iT 34 50 10	– do. – YM34501	〃	OPC		
※		iT 34 50 20	– do. – YM34502	〃	OPM		
※		iT 34 70 00	– do. – YM347	〃	VRG		
※		iT 43 90 00	– do. – PSA439	〃	Pressure Sensor		
※		iT 63 30 00	– do. – YM633	〃	SECII		
※		iN 00 33 00	– do. – MB8516	〃	EP ROM iG04510		
		iA 05 09 10	Transistor 2SA509(Y)	トランジスタ			
		iA 07 43 00	– do. – 2SA743A(B)	〃			
		iA 10 15 70	– do. – 2SA1015(O,Y)	〃			
		iB 05 95 20	– do. – 2SB595(O,Y)	〃			
		iB 06 86 10	– do. – 2SB686(R,O)	〃			
		iC 04 58 80	– do. – 2SC458(B,C)	〃			
		iC 04 58 90	– do. – 2SC458LG(C,D)	〃			
		iC 04 59 00	– do. – 2SC458(C,D)	〃			
		iC 05 09 20	– do. – 2SC509(Y)	〃			
		iC 07 52 30	– do. – 2SC752(O,Y)	〃			
		iC 12 12 00	– do. – 2SC1212A(C)	〃			
		iC 19 59 30	– do. – 2SC1959(O,Y)	〃			
		iE 10 12 00	FET 2SK105F	FET			
		iF 00 00 10	Diode 1N34A	ダイオード			
		iF 00 00 40	– do. – 1S1555	〃			
		iF 00 00 70	– do. – 1S2473VE	〃			
		iF 00 08 80	– do. – Zener WZ-050	ツェナーダイオード			
		iF 00 16 60	– do. – – do. – RD3.6EB1	〃			
		iH 00 01 10	– do. – 5B-2	ダイオード			
		iH 00 02 80	– do. – 1D2C1	〃			
		iH 00 02 90	– do. – 1D2Z1	〃			
		iH 00 05 90	– do. – 10E-1	〃			
		iK 00 02 90	Photo - Coupler P873-13	フォトカプラー			
		FC 08 54 70	Metalized Myler Cap. 0.47μF/100V	MMコンデンサ			
		FD 15 21 80	Polystyrene Cap. 180PF	スチコン			

※ New Parts (新規部品)

	Ref. No.	Part No.	Description	部品名	Remarks	Common Model	Markets
		FD 15 22 70	Polystyrene Cap. 270PF	スチコン			
		FD 15 23 30	– do. – 330PF	〃			
		FM 09 62 20	Bipolar Electrolytic Cap 2.2μF/16V	バイポーラケミコン			
		FM 09 63 30	– do. – 3.3μF/16V	〃			
		FM 09 64 70	– do. – 4.7μF/16V	〃			
		FM 09 71 00	– do. – 10μF/16V	〃			
		FM 09 72 20	– do. – 22μF/16V	〃			
		FM 22 61 00	– do. – 1μF/25V	〃			
		FZ 00 22 50	Spark Suppressor Cap. 0.022μF	スパークキラーコンデンサ			
※		FZ 00 23 90	Electrolytic Cap. 3300μF/25V	ケミコン			
※		FZ 00 24 00	– do. – 3300μF/35V	〃			
		HL 31 53 30	Metal Oxide Film Resistor 330Ω 1W	酸金抵抗			
		HL 31 54 70	– do. – 470Ω 1W	〃			
		HL 31 62 20	– do. – 2.2KΩ 1W	〃			
		HV 55 42 20	Flame Proof Carbon Resistor 22Ω	不燃化カーボン抵抗			
		HV 55 44 70	– do. – 47Ω	〃			
		HV 55 51 00	– do. – 100Ω	〃			
※		HZ 00 16 70	Module Resistor 4.7KΩx8	モジュール抵抗			
※		HZ 00 16 80	– do. – 4.7KΩx12	〃			
※		HZ 00 16 90	– do. – 10KΩx12	〃			
※		HZ 00 17 00	– do. – 27KΩx12	〃			
※		HZ 00 17 10	– do. – 100KΩx10	〃			
※		HZ 00 17 20	– do. – 470KΩx12	〃			
※		HZ 00 17 30	Metal Film Resistor 1KΩ ±0.1%	金皮抵抗			
※		HZ 00 17 40	– do. – 2KΩ ±0.1%	〃			
		HS 11 04 00	Variable Resistor B5KΩ 16φ	可変抵抗器	Pitch		
※		HS 31 11 10	– do. – G50KΩx2 16φ	〃	Center Tap Treb. Mid. Bass		
※		HS 31 11 20	– do. – A50KΩx2 16φ	〃	Vol.		
※		HS 31 11 30	– do. – A10KΩ 16φ	〃	Tre. Depth, Vib. Depth		
※		HS 31 11 40	– do. – C100KΩ 16φ	〃	Tre. Speed, Vib. Speed		
		HT 19 00 50	Variable Resistor B10KΩ	半固定抵抗			
		HT 19 00 60	– do. – B20KΩ	〃			
		HT 19 00 70	– do. – B50KΩ	〃			
		HT 19 01 30	– do. – B2KΩ	〃			
		KA 10 09 40	See - Saw Switch	シーソースイッチ	Power		
		KA 40 05 00	Slide Switch	スライドスイッチ	Line Out		
		KA 40 07 00	– do. –	〃	PGM Lock		
※		KA 40 08 30	Voltage Selector	電圧切替器			
※		KA 50 15 90	Rotary Switch	ロータリースイッチ	Detune		
		KA 90 17 20	Push Switch	プッシュスイッチ			
		KA 90 18 80	– do. –	〃	Store		
		KB 00 06 90	Fuse (Miniature) T2.5A 250V	ミニチュアヒューズ			G
		KB 00 07 40	– do. – – do. – T1.6A 250V	〃			G
		KB 00 07 50	– do. – – do. – T2.0A 250V	〃			G
※		KB 00 23 50	– do. – – do. – 1.6A 250V	〃			J

※ New Parts (新規部品)

	Ref. No.	Part No.	Description	部品名	Remarks	Common Model	Markets
※		KB 00 23 60	Fuse (Miniature) 2.0A 250V	ミニチュアヒューズ			J
※		KB 00 23 70	– do. – – do. – 2.5A 250V	〃			J
※		KB 00 25 00	– do. – – do. – 1.6A 125V	〃			U,C
※		KB 00 25 10	– do. – – do. – 2.0A 125V	〃			U,C
※		KB 00 25 20	– do. – – do. – 2.5A 125V	〃			U,C
		NB 04 89 90	LED Unit	LEDユニット			
※		NB 81 60 60	Card Reader Unit	カードリーダーユニット			
※		NB 81 61 50	Key Switch Unit I	スイッチユニットI	6		
※		NB 81 61 60	– do. – II	〃 II	4		
		NB 03 70 40	Tablet Switch	タブレットスイッチ	Pedal		
※		NB 81 61 70	Power Supply Unit	電源ユニット			J
※		NB 81 72 20	– do. –	〃			U,C
※		NB 81 72 30	– do. –	〃			G
※		NB 81 74 00	Power Transformer Unit	電源トランスユニット			
※		MG 00 10 30	AC Cord	電源コード			J
※		MG 00 10 40	– do. –	〃			U
※		MG 00 10 50	– do. –	〃			G
※		MG 00 11 20	– do. –	〃			C
※		MZ 80 85 50	Flat Cable Assy FM 30P	FM 線材キット			
※		MZ 80 85 60	– do. – MPX 30P	MPX 〃			
※		MZ 80 85 80	– do. – TD 20P	TD 〃			
※		MZ 80 85 90	– do. – RW 26P	RW 〃			
		GD 90 02 50	Line Transformer	ラインドランス			
		GE 30 03 50	Choke Coil 68μH	チョークコイル			
		GE 90 01 70	OSC Coil 125μH	OSCコイル			
※		QU 00 10 00	Ceramic Vibrator 6.00MHz	セラミック発振子			
		LB 10 04 70	Phone Jack S-G7641	ジャック			
		LB 30 14 40	– do. –	〃			
		LB 30 01 60	Cannon Socket XLR3-32	キャノンソケット			
※		LB 20 18 20	AC Inlet 2P	2Pインレット			
		LB 30 07 30	Base Pin 3P	2.5ピッチベースピン	Top Entry		
		LB 50 02 50	– do. – 5P	〃	– do. –		
		LB 60 24 60	– do. – 7P	〃	– do. –		
		LB 60 24 90	– do. – 8P	〃	– do. –		
		LB 60 24 70	– do. – 10P	〃	– do. –		
		LB 60 31 30	– do. – 12P	〃	– do. –		
		LB 50 02 70	– do. – 5P	〃	Side Entry		
※		LB 60 37 00	– do. – 6P	〃	– do. –		
		LB 60 25 00	– do. – 7P	〃	– do. –		
		LB 50 03 70	– do. – 5P	〃	Bootom Entry		
		LB 60 30 60	– do. – 8P	〃	– do. –		
		LB 60 30 70	– do. – 10P	〃	– do. –		
		LB 30 07 20	Housing 3P	2.5ピッチハウジング			
		LB 50 02 40	– do. – 5P	〃			
		LB 60 36 80	– do. – 6P	〃			
		LB 60 24 40	– do. – 7P	〃			
		LB 60 24 80	– do. – 8P	〃			

※ New Parts (新規部品)

	Ref. No.	Part No.	Description	部品名	Remarks	Common Model	Markets
		LB 60 24 50	Housing 10P	2.5ピッチハウジング			
		LB 60 29 20	– do. – 12P	〃			
		LB 60 24 20	Header 20P	ヘッダー			
		LB 60 35 50	– do. – 26P	〃			
		LB 60 24 30	– do. – 30P	〃			
		LB 20 14 30	Plug 2P	2Pプラグ			
		LB 30 07 70	– do. – 3P	3Pプラグ			
※		LB 60 33 20	– do. – 24P	24Pプラグ			
		LB 20 14 20	Cap 2P	2Pキャップ			
		LB 30 07 60	– do. – 3P	3Pキャップ			
※		LB 60 33 00	– do. – 24P	24Pキャップ			
		LB 30 11 40	Connector 3P	コネクター			
		LB 60 38 30	– do. – 8P	〃			
		LB 60 38 10	Housing 8P	ハウジング			
		LB 60 39 00	IC Socket 24P	ICソケット			
		LB 60 39 10	– do. – 40P	〃			
		LB 20 15 30	Fuse Holder Pin	ヒューズホルダーピン			
		LB 10 05 60	Contact	コンタクトピン オス	Male		
		BB 00 44 30	Contact	2.5ピッチコンタクトピン			
		BB 00 44 40	– do. –	コンタクトピン メス	Female		
		BB 00 44 90	– do. –	〃			
		BB 00 49 90	– do. –	〃			
		CB 07 28 80	Insulation Bushing	絶縁ブッシュ			
		iL 00 04 00	– do. –	〃			
		iL 00 02 70	Mica Base	マイカベース			
		iL 00 04 60	– do. –	〃			
		NB 81 60 60	Card Reader Unit	カードリーダーユニット			
※		NX 80 01 10	Mech. Unit, Card Reader K90-0799	メカユニット			
※		NX 80 01 20	Circuit Board, Card Reader K90-0711	C/Rシート			
※		iX 00 01 10	IC TDA1041-RP12	IC	E60-0039		
※		iX 00 01 20	– do. – EHMD226W34	〃	E60-0040		
※		iX 00 01 30	– do. – M5923	〃	E60-1092		
※		iG 05 26 00	– do. – HD74LS05P	〃	E60-1140		
		iA 05 64 90	Transistor 2SA564(S)	トランジスタ	E65-6054		
※		iX 00 01 40	– do. – 2SA683-R	〃	E65-6089		
※		iX 00 01 50	Diode 1S1558	ダイオード	E65-5001		
		iH 00 00 30	– do.– 10D1	〃	E65-5002		
※		KX 00 00 20	Relay RZ-5	リレー	E62-1105		
※		HX 00 00 10	Variable Resestor B1.5KΩ	半固定抵抗	E62-9540		
※		NB 81 61 20	PC-1 Unit	PC-1ユニット	12Key		
※		NB 81 61 30	PC-2 Unit	PC-2ユニット	16Key		

※ New Parts (新規部品)

B. Cabinet（外装）

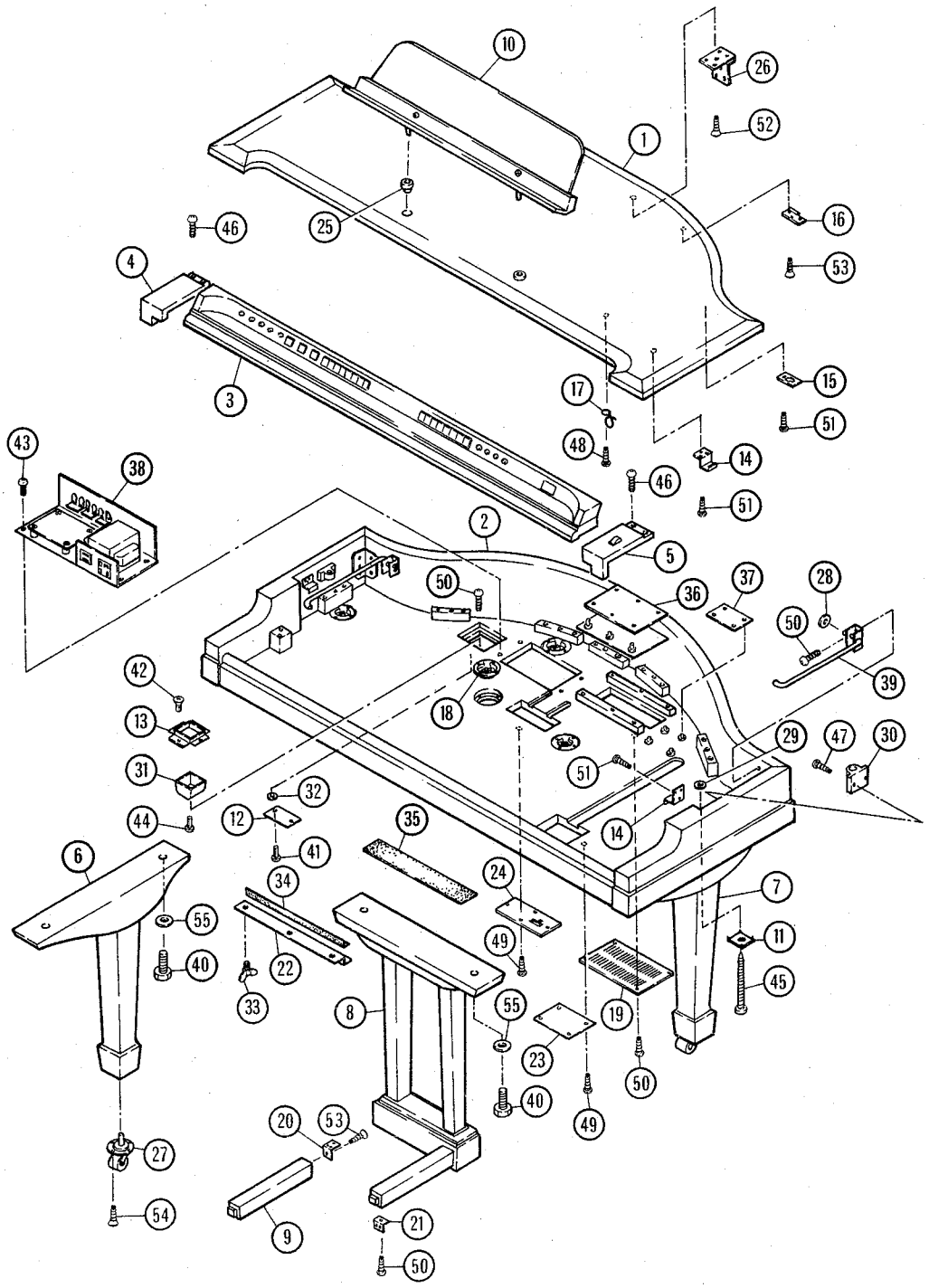

	Ref. No.	Part No.	Description	部品名	Remarks	Common Model	Markets
※	1	DA 80 54 20	Top Board Ass'y	屋根集成			
※	2	DA 80 54 30	Side Board Ass'y	枠集成			
※	3	DA 80 54 90	Control Panel Ass'y	コントロールパネル集成			
※	4	DA 80 55 20	End Block Ass'y (L)	拍子木集成（左）			
※	5	DA 80 55 30	— do. — (R)	〃 （右）			

※ New Parts（新規部品）

	Ref. No.	Part No.	Description	部品名	Remarks	Common Model	Markets
※	6	DA 80 55 40	Fore Leg Ass'y (L)	前脚集成（左）			
※	7	DA 80 55 50	— do. — (R)	〃 （右）			
※	8	DA 80 55 60	Hind Leg Ass'y	後脚集成			
※	9	DB 81 62 30	Hind Leg Support	後脚横柱			
※	10	DA 80 56 10	Music Rest Ass'y	譜面板集成			
	11	AA 02 11 80	Square Washer	シャーシ締付金具			
	12	AA 81 12 60	Cover	蓋		GS2	J
		AA 81 26 00	— do. —	〃		GS2	U, C, G
	13	AA 81 14 00	Battery Cover	バッテリーカバー		GS2	
※	14	AA 81 45 90	Holder, Top Board	受け金具			
※	15	AA 81 46 00	Holder, Stay	ステー受け金具			
※	16	AA 81 46 10	D Rack Hinge (I)	Dラック蝶番（I）	Female		
※	17	AA 81 46 30	D Rack Hook	Dラックフック		GS2	
※	18	AA 81 46 40	Nut, Leg	脚用ナット			
※	19	AA 81 46 50	Radiator Grille	放熱グリル			
※	20	AA 81 46 70	Hinge, Hind Leg	後脚横柱蝶番			
※	21	AA 81 46 80	Angle, Hind Leg	〃 アングル			
※	22	AA 81 48 30	Music Rest Holder (I)	譜面板ホルダー（I）			
※	23	AA 81 50 90	CNX Plate	CNXプレート			
※	24	AA 81 51 00	CNP Plate	CNPプレート			
※	25	AA 81 68 80	Music Rest Bushing	譜面板ブッシュ			
※	26	BB 80 16 10	Hinge, Top Board	屋根蝶番			
※	27	BB 80 16 20	Caster	キャスター			
	28	CB 00 58 30	Bushing	ブッシュ			
	29	CB 01 06 40	P Nut	Pナット			
	30	CB 01 85 90	Keyboard Stopper	鍵盤受け	Top Board Screw Guide		
	31	CB 81 42 40	Battery Case	バッテリーケース		GS2	
	32	CB 81 29 20	Stopper	グリップ型止め輪			
※	33	CB 81 83 30	Plastic Screw 4 x 16 BL	プラスチック製化粧ネジ			
※	34	CC 02 18 50	Felt BL	フェルト			
※	35	CC 02 18 60	— do. — BL	〃			
※	36	NA 80 69 60	Circuit Board A # 8609	Aシート		GS2	
※	37	NA 80 70 60	— do. — PN-CNB # 8614	PN-CNB シート			
※	38	NB 81 61 70	Power Supply Unit	電源ユニット			J
※		NB 81 72 20	— do. —	〃			U, C
※		NB 81 72 30	— do. —	〃			G
※	39	NB 81 72 80	Stay Ass'y	ステー Ass'y			
※	40	EX 00 00 70	Bolt M10 x P1.25 x 75 BL	ボルト			
	41	EA 33 02 00	Pan Head Screw M3 x 20 BL	ナベ小ネジ			
	42	EA 34 01 20	— do. — M4 x 12 BL	〃			
	43	ED 04 01 40	Bind Screw M4 x 14 Ye	バインド小ネジ			
	44	ED 33 00 60	— do. — M3 x 6 BL	〃			
	45	EG 35 15 50	Pan Head Screw M5 x 155 BL	尖先ナベ小ネジ			
	46	EH 04 02 50	Truss Head Tapping Screw 4 x 25 Ye	トラスタッピングネジ			
	47	Ei 03 51 40	Bind Tapping Screw 3.5 x 14 Ye	バインドタッピングネジ			
	48	Ei 33 01 20	— do. — 3 x 12 BL	〃			
	49	Ei 33 51 20	— do. — 3.5 x 12 BL	〃			
	50	Ei 33 51 40	— do. — 3.5 x 14 BL	〃			
	51	Ei 34 01 60	Bind Tapping Screw 4 x 16 BL	バインドタッピングネジ			
	52	EO 04 01 60	Flat Head Tapping Screw 4 x 16 Ye	皿タッピングネジ			
	53	EO 33 51 60	— do. — 3.5 x 16 BL	〃			
	54	EP 04 13 20	Flat Head Wood Screw 4.1 x 32 Ye	皿木ネジ			
	55	EV 20 31 00	Flat Washer φ 10 BL	平座金			

※ New Parts (新規部品)

C. Pedal Assembly (ペダルAss'y)

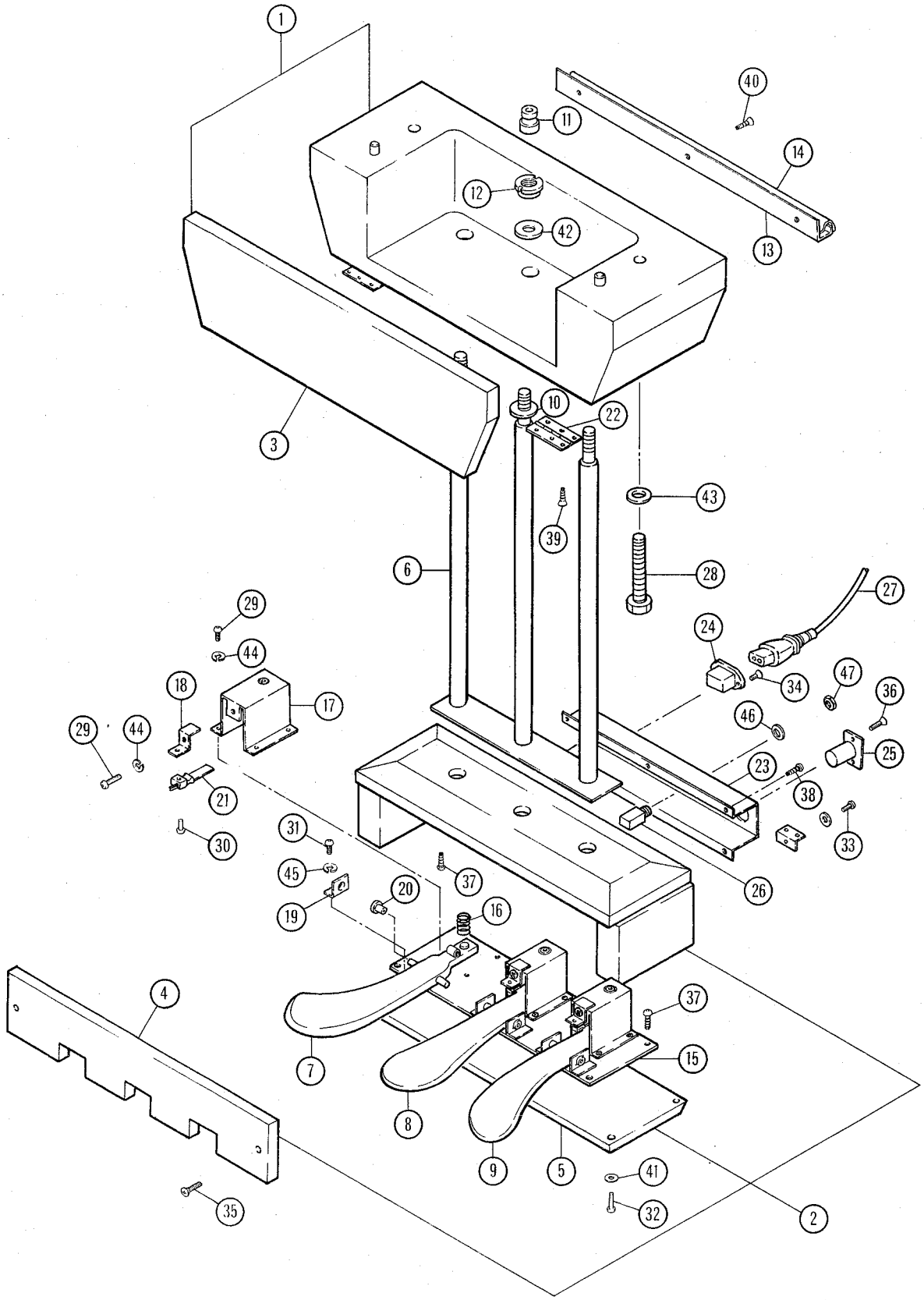

	Ref. No.	Part No.	Description			部品名	Remarks	Common Model	Markets
※		DA 80 55 80	Pedal Case Ass'y			ペダル柱集成			
※	1	DA 80 55 90	Bottom Beam Ass'y			ペダル持竿集成			
※	2	DA 80 56 00	Pedal Box Ass'y			ペダル箱集成			
※	3	DB 81 62 50	Bottom Beam Cover			ペダル持竿蓋			
※	4	DB 81 63 20	Front Board, Pedal Box			ペダル箱前板			
※	5	DB 81 63 30	Bottom Board, Pedal Box			ペダル箱底板			
※	6	AA 81 46 90	Pedal Pipe			ペダル箱吊りパイプ			
※	7	NB 81 62 30	Pedal (L)			ペダル(左)			
※	8	NB 81 62 40	– do. – (C)			〃(中)			
※	9	NB 81 62 50	– do. – (R)			〃(右)			
※	10	AA 81 47 00	Pedal Pipe Washer			飾りワッシャー			
※	11	CB 81 70 50	Pedal Pipe Bushing			ペダルパイプブッシュ			
※	12	EX 00 00 90	Pedal Pipe Nut	15 x P1		軸受用ナット			
※	13	AA 81 47 10	Music Rest Holder (II)			譜面板ホルダー(II)			
※	14	CC 02 18 50	Felt		BL	フェルト			
※	15	AA 81 51 20	Pedal Ass'y Fixing Plate			ペダルAss'y取付板			
※	16	AA 81 51 30	Pedal Spring			ペダルバネ			
※	17	AA 81 51 40	Pedal Stopper			ペダルストッパー			
※	18	AA 81 51 50	Pedal SW Fixing Plate			ペダルSW取付板			
※	19	AA 81 51 60	Pedal Shaft Holder			ペダル軸受			
	20	CB 00 58 30	Pedal Shaft Bushing			ブッシュ			
	21	NB 03 70 40	Tablet Switch			タブレットスイッチ			
	22	AA 03 44 70	Hinge			蝶番			
※	23	AA 81 51 10	I/O Chassis			I/Oシャーシ			
※	24	LB 20 18 20	AC Inlet 2P	C-209		2Pインレット		GS2	
	25	LB 30 01 60	Cannon Socket	XLR 3-32		キャノンソケット			
	26	LB 10 04 70	Jack	JL2A		ジャック			
※	27	MG 00 10 30	AC Cord			電源コード			J
※		MG 00 10 40	– do. –			〃			U
※		MG 00 10 50	– do. –			〃			G
※		MG 00 11 20	– do. –			〃			C
	28	EX 00 00 80	Bolt	M10 x P1.25 x 100	BL	ボルト			
	29	EA 03 00 60	Pan Head Screw	M3 x 6	Ye	ナベ小ネジ			
	30	EA 03 01 00	– do. –	M3 x 10	– do. –	〃			
	31	EA 04 00 60	– do. –	M4 x 6	– do. –	〃			
	32	EA 04 01 80	– do. –	M4 x 18	– do. –	〃			
	33	EA 34 01 00	– do. –	M4 x 10	BL	〃			
	34	EB 33 00 60	Flat Head Screw	M3 x 6	– do. –	皿小ネジ			
	35	EB 33 01 80	– do. –	M3 x 18	– do. –	〃			
	36	EF 33 00 60	Oval Head Screw	M3 x 6	– do. –	丸皿小ネジ			
	37	Ei 03 51 40	Bind Tapping Screw	3.5 x 14	Ye	バインドタッピングネジ			
	38	EJ 33 01 00	Pan Head Tapping Screw	3 x 10	BL	ナベタッピングネジ			
	39	EO 33 01 20	Flat Head Tapping Screw	3 x 12	– do. –	皿タッピングネジ			
	40	EO 33 51 60	– do. –	3.5 x 16	– do. –	〃			
	41	EV 20 00 40	Flat Washer	ϕ4	Ye	平座金			
	42	EV 20 01 60	– do. –	ϕ16		〃			
	43	EV 20 31 00	– do. –	ϕ10	BL	〃			
	44	EV 30 00 30	Spring Lock Washer	ϕ3	Ye	バネ座金			
	45	EV 30 00 40	– do. –	ϕ4	– do. –	〃			
	46	LX 20 00 10	Flat Washer	ϕ9		特殊平座金			
	47	LX 20 00 20	Hexagonal Nut	M9		特殊六角ナット			

※ New Parts (新規部品)

D. D Rack & Power Supply Unit (Dラック及び電源ユニット)

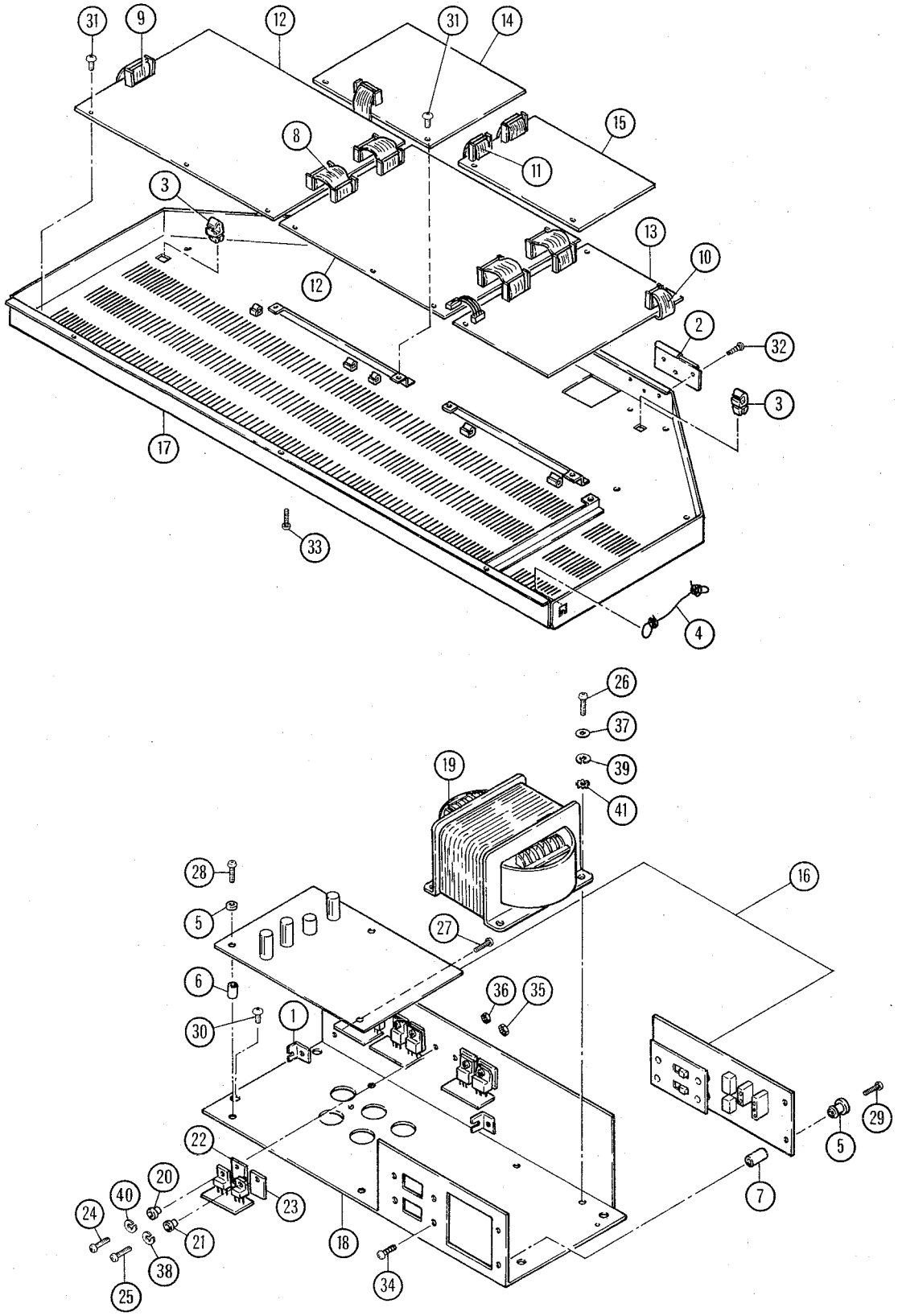

	Ref. No.	Part No.	Description		部品名	Remarks	Common Model	Markets
	1	AA 81 50 80	P.C.B. Catcher		シートキャッチャー			
※	2	AA 81 63 10	D Rack Hinge (II)		Dラック蝶番(II)	Male		
※	3	CB 81 70 60	P.C.B. Holder		PCB ホルダー			
※	4	CB 81 70 70	D Rack Rope		ラックロープ			
※	5	CB 81 70 90	Bushing, P.C.B. Spacer		ワンタッチブッシュ			
※	6	CB 81 73 90	P.C.B. Spacer		ワンタッチカラー			
※	7	CB 81 74 00	— do. —		〃			
※	8	MZ 80 85 50	Flat Cable Ass'y	FM	FM 線材キット		GS2	
※	9	MZ 80 85 60	— do. —	MPX	MPX 〃			
※	10	MZ 80 85 80	— do. —	TD	TD 〃		GS2	
※	11	MZ 80 85 90	— do. —	RW	RW 〃			
※	12	NA 80 69 20	Circuit Board	FM #8605	FM シート		GS2	
※	13	NA 80 69 30	— do. —	KC #8606	KC シート		GS2	
※	14	NA 80 69 40	— do. —	MPX #8607	MPX シート			
※	15	NA 80 69 50	— do. —	RW #8608	RW シート			
※	16	NA 80 70 10	— do. —	DC #8615	DC シート			J
※		NA 80 74 40	— do. —	DC #8615	〃			U, C
※		NA 80 74 50	— do. —	DC #8615	〃			G
※	17	NB 81 59 90	D Rack		Dラック			
※	18	NB 81 61 70	Power Supply Unit		電源ユニット			J
※		NB 81 72 20	— do. —		〃			U, C
※		NB 81 72 30	— do. —		〃			G
※	19	NB 81 74 00	Power Transformer Unit		電源トランスユニット			
	20	CB 07 28 80	Insulation Bushing		絶縁ブッシュ			
	21	iL 00 04 00	— do. —		〃			
	22	iL 00 02 70	Mica Base		マイカベース			
	23	iL 00 04 60	— do. —		〃			
	24	EA 02 60 80	Pan Head Screw	M2.6 x 8 Ye	ナベ小ネジ			
	25	EA 03 00 80	— do. —	M3 x 8 Ye	〃			
	26	EA 04 00 80	— do. —	M4 x 8 Ye	〃			
	27	ED 03 00 60	Bind Screw	M3 x 6 Ye	バインド小ネジ			
	28	ED 03 02 00	— do. —	M3 x 20 Ye	〃			
	29	ED 03 02 50	— do. —	M3 x 25 Ye	〃			
	30	ED 04 01 40	— do. —	M4 x 14 Ye	〃			
	31	ED 33 00 60	— do. —	M3 x 6 BL	〃			
	32	ED 34 00 60	— do. —	M4 x 6 BL	〃			
	33	ED 34 01 00	— do. —	M4 x 10 BL	〃			
	34	Ei 02 61 00	Bind Tapping Screw	2.6 x 10 Ye	バインドタッピングネジ			
	35	EV 10 00 30	Hexagonal Nut	M3	六角ナット			
	36	EV 10 02 60	— do. —	M2.6	〃			
	37	EV 20 00 40	Flat Washer	φ4	平座金			
	38	EV 30 00 30	Spring Lock Washer	φ3	バネ座金			
	39	EV 30 00 40	— do. —	φ4	〃			
	40	EV 30 02 60	— do. —	φ2.6	〃			
	41	EV 42 00 40	Toothed Lock Washer	B4S	歯付座金			

※ New Parts (新規部品)

E. Keyboard Assembly (鍵盤)

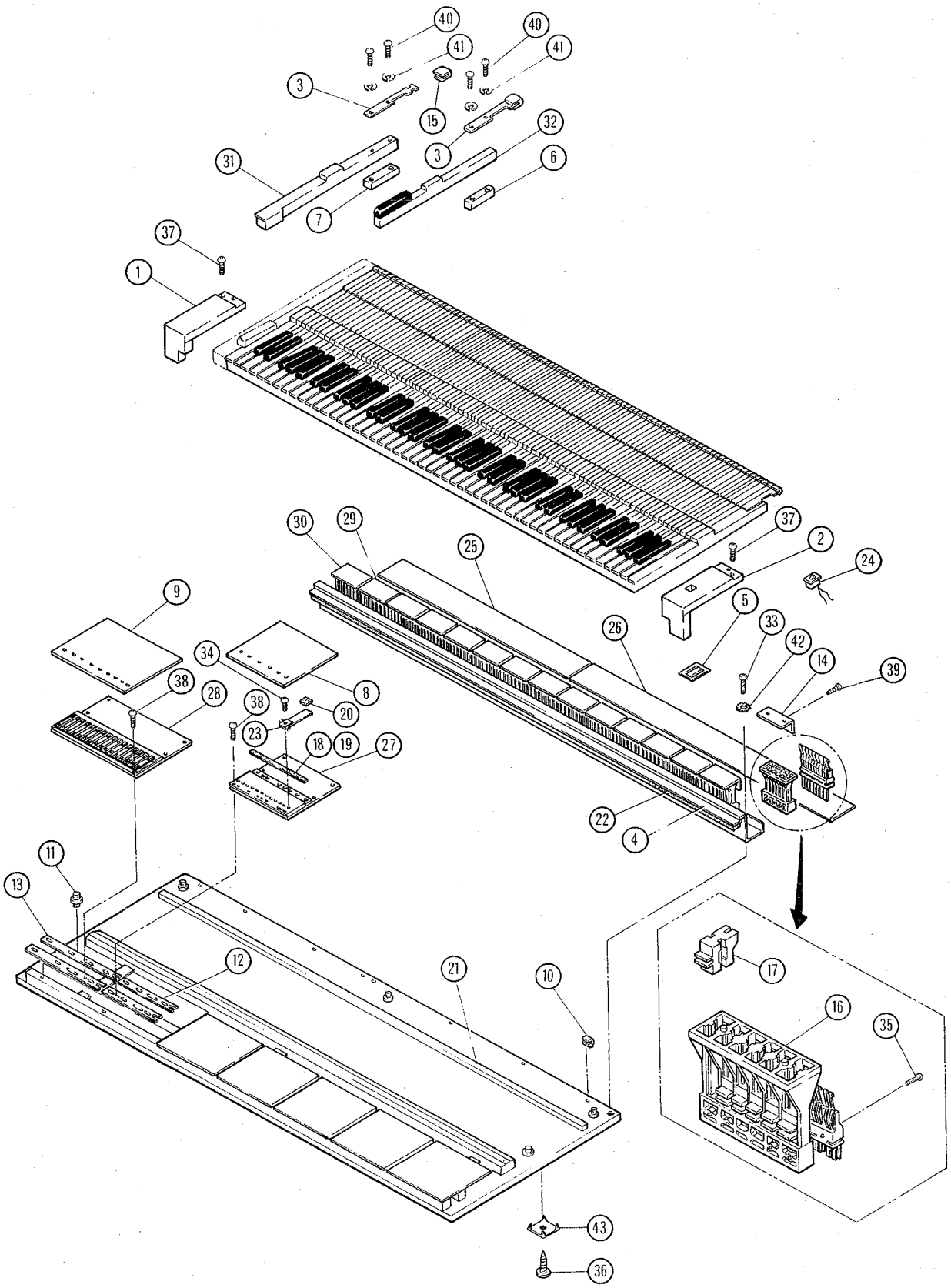

	Ref. No.	Part No.	Description		部品名	Remarks	Common Model	Markets
※	1	DA 80 55 20	End Block Ass'y	(L)	拍子木集成(左)			
※	2	DA 80 55 30	— do. —	(R)	〃 (右)			
※	3	AA 81 49 80	Actuator Plate		アクチェータ駆動板		GS2	
※	4	AA 81 50 70	Switch Rail		スイッチレール			
※	5	BB 80 16 80	Stopper Ring, SW		スイッチ止め輪			
※	6	BF 00 00 10	Key Weight		キーウェート	Black Key	GS2	
※	7	BF 00 00 20	— do. —		〃	White Key	GS2	
※	8	CA 80 23 70	Dust Proof Cover	PC-1	PC-1 防塵シート			
※	9	CA 80 23 80	— do. —	PC-2	PC-2 防塵シート			
※	10	CB 03 54 00	P.C.B. Support		PCB サポート			
※	11	CB 08 70 00	P.C.B. Holder		シートホルダー			
※	12	CB 81 72 80	PC-1 Film		PC-1 フィルム			
※	13	CB 81 72 90	PC-2 Film		PC-2 フィルム			
※	14	CB 81 73 00	Contact Cover		接点カバー			
※	15	CB 81 73 60	Actuator Plate Cap		駆動板キャップ		GS2	
※	16	CB 81 73 70	Actuator Guide		アクチェータガイド		GS2	
※	17	CB 81 73 80	Actuator		アクチェータ		GS2	
※	18	CC 01 46 30	PC-1 Stopper Felt		PC-1ストッパーフェルト			
※	19	CC 01 46 40	PC-2 — do. —		PC-2 〃			
※	20	CC 03 04 80	Sensor Lever Felt		センサーレバーフェルト			
※	21	CC 07 04 10	Key Back Rail Felt		ストッパーフェルトI			
※	22	CD 07 02 30	Keyboard Stopper Felt		ストッパーフェルトII			
※	23	iT 43 90 00	IC	PSA439	IC			
	24	KA 10 09 40	See-Saw Switch		電源スイッチ	Power		
※	25	NA 80 69 70	Circuit Board	MK1 #8610	MK1 シート			
※	26	NA 80 69 80	— do. —	MK2 #8611	MK2 シート			
※	27	NB 81 61 20	PC-1 Unit		PC-1 ユニット	12 Key		
※	28	NB 81 61 30	PC-2 Unit		PC-2 ユニット	16 Key		
※	29	NB 81 61 50	Key Switch Unit I		スイッチユニット I	6	GS2	
※	30	NB 81 61 60	— do. — II		〃 II	4	GS2	
※	31	NX 80 01 40	White Key Ass'y	C	白鍵 Ass'y			
※		NX 80 01 50	— do. —	D	〃			
※		NX 80 01 60	— do. —	E	〃			
※		NX 80 01 70	— do. —	F	〃			
※		NX 80 01 80	— do. —	G	〃			
※		NX 80 01 90	— do. —	A	〃			
※		NX 80 02 00	— do. —	B	〃			
※		NX 80 02 10	— do. —	A'	〃	1A		
※		NX 80 02 20	— do. —	C'	〃	88C		
※	32	NX 80 02 30	Black Key Ass'y		黒鍵 Ass'y			
	33	EA 04 01 20	Pan Head Screw	M4 x 12 Ye	ナベ小ネジ			
	34	ED 02 60 60	Bind Screw	M2.6 x 6 Ye	バインド小ネジ			
	35	ED 03 02 50	— do. —	3 x 25 Ye	〃			
	36	EG 35 03 00	Pan Head Screw	M5 x 30 BL	尖先ナベ小ネジ			
	37	EH 04 02 50	Truss Head Tapping Screw	4 x 25 Ye	トラスタッピングネジ			
	38	Ei 03 01 40	Bind Tapping Screw	3 x 14 Ye	バインドタッピンネジ			
	39	Ei 03 01 60	— do. —	3 x 16 Ye	〃			
	40	Ei 04 03 50	— do. —	4 x 35 Ye	〃			
	41	EV 30 00 40	Spring Lock Washer	φ4 Ye	バネ座金			
	42	EV 41 00 40	Toothed Lock Washer	A4S Ye	歯付座金			
	43	AA 02 11 80	Square Washer		シャーシ締付金具			

※ New Parts (新規部品)

F. CNX Plate（CNX プ レ ー ト）

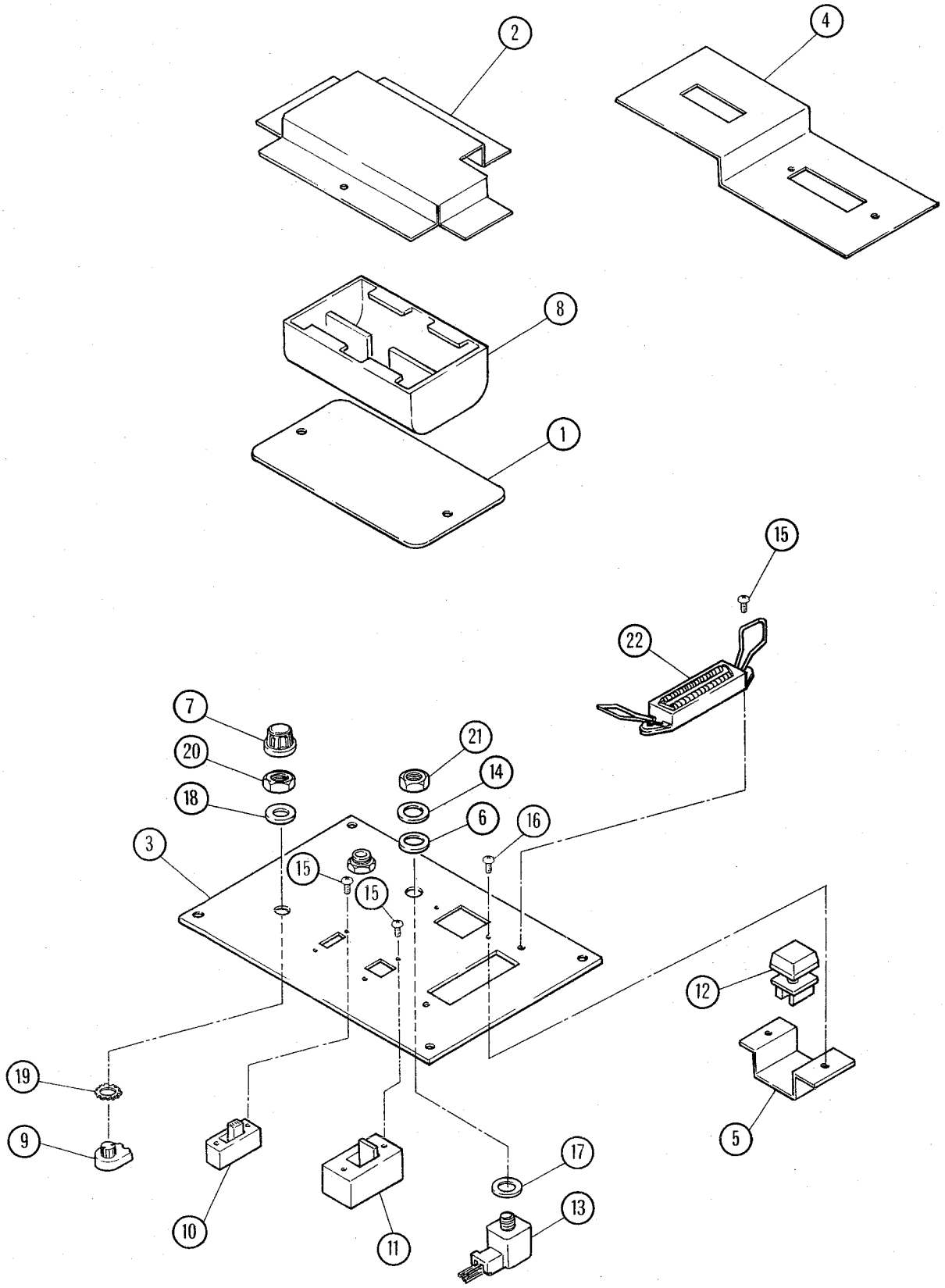

	Ref. No.	Part No.	Description	部品名	Remarks	Common Model	Markets
	1	AA 81 12 60	Cover	蓋		GS2	J
		AA 81 26 00	— do. —	〃		GS2	U, C, G
	2	AA 81 14 00	Battery Cover	バッテリーカバー		GS2	
※	3	AA 81 50 90	CNX Plate	CNX プレート			
※	4	AA 81 51 00	CNP Plate	CNP プレート			
※	5	AA 81 64 20	Switch Angle	スイッチアングル			
	6	CB 81 00 90	Insulation Nut	絶縁ナット			
	7	CB 81 01 30	Knob	ツマミ	Pitch		
	8	CB 81 42 40	Battery Case	電池ケース		GS2	
※	9	HS 11 04 00	Variable Resistor B5KΩ	可変抵抗器	Pitch		
	10	KA 40 05 00	Slide Switch	スライドスイッチ	Line Out		
	11	KA 40 07 00	— do. —	〃	PGM Lock		
※	12	KA 90 18 80	Push Switch	プッシュスイッチ	Store		
※	13	LB 30 14 40	Jack	ジャック	Foot SW. Phones		
	14	LX 20 00 10	Flat Washer φ9	特殊平座金			
	15	EA 32 50 60	Pan Head Screw M2.5 x 6 BL	ナベ小ネジ			
	16	EA 33 00 60	— do. — M3 x 6 — do. —	〃			
	17	EK 00 23 70	Fiber Washer	ファイバーワッシャー			
	18	EV 22 00 70	Flat Washer φ7	特殊平座金			
	19	EV 41 00 70	Toothed Lock Washer A7S	歯付座金			
	20	EZ 30 70 10	Hexagonal Nut M7	特殊六角ナット			
	21	EZ 30 90 10	— do. — M9	〃			
※	22	LB 60 33 00	Connector 24P	コネクタ	CNX. CNP		

※ New Parts (新規部品)

G. Control Panel & Top Board Assembly（コントロールパネル及び屋根）

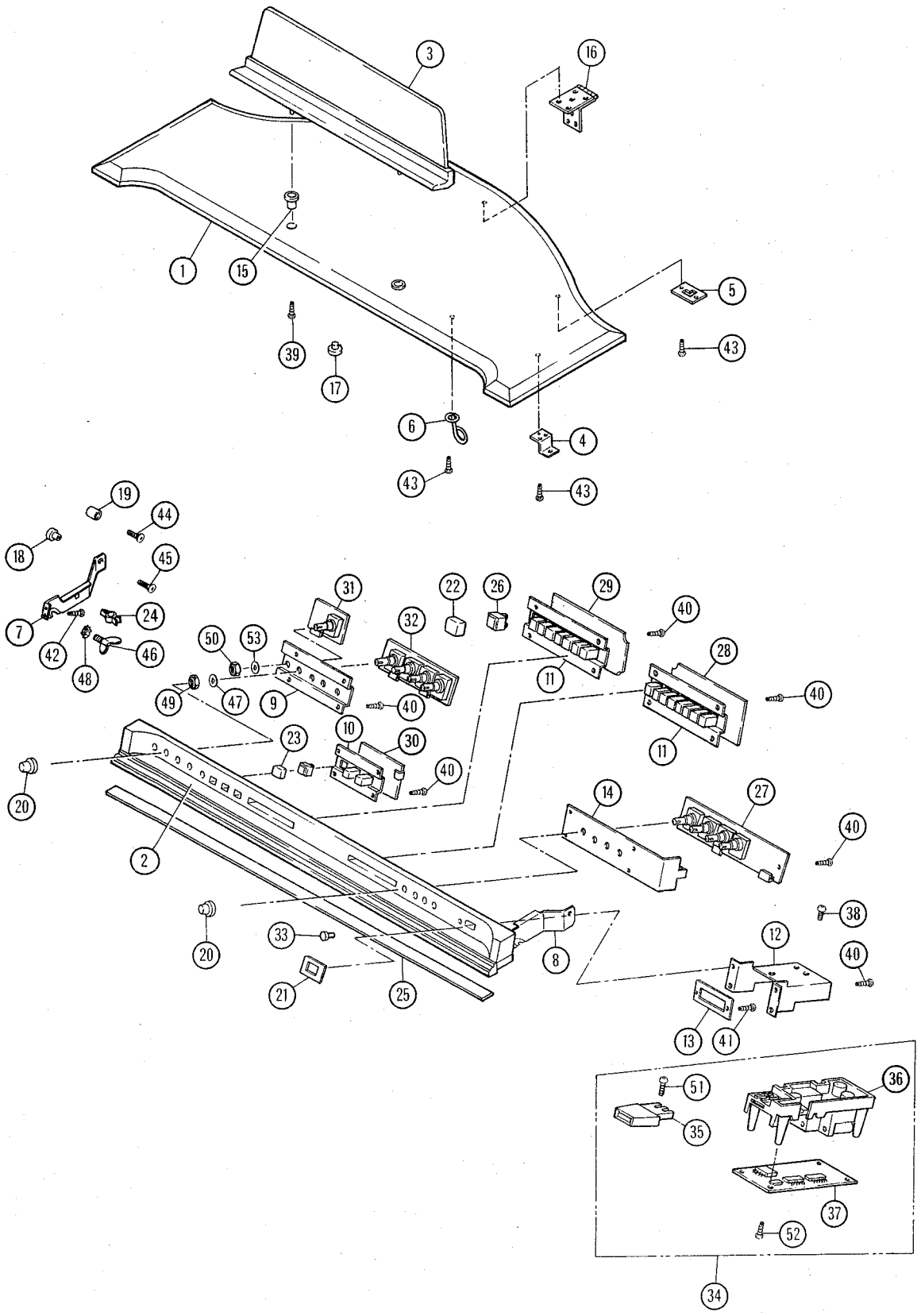

	Ref. No.	Part No.	Description	部品名	Remarks	Common Model	Markets
※	1	DA 80 54 20	Top Board Ass'y	屋根集成			
※	2	DA 80 54 90	Control Panel Ass'y	コントロールパネル集成			
※	3	DA 80 56 10	Music Rest Ass'y	譜面板集成			
※	4	AA 81 45 90	Holder, Top Board	受け金具			
※	5	AA 81 46 00	Holder, Stay	ステー受け金具			
※	6	AA 81 46 30	D Rack Hook	Dラックフック		GS2	
※	7	AA 81 48 90	Control Panel Rotary (L)	パネル回転金具 (左)			
※	8	AA 81 49 00	— do. — (R)	〃 (右)			
※	9	AA 81 49 10	VR Angle	ボリュームアングル			
※	10	AA 81 49 20	SW Angle I	スイッチアングル I			
※	11	AA 81 49 30	— do. — II	〃 II			
※	12	AA 81 49 40	Holder, Card Reader	リーダーホルダー			
※	13	AA 81 51 80	Plate, C/R Escutcheon	エスカッションプレート			
※	14	AA 81 64 60	EQ Plate	EQプレート			
※	15	AA 81 68 80	Music Rest Bushing	譜面板ブッシュ			
※	16	BB 80 16 10	Hinge, Top Board	屋根蝶番			
	17	CB 00 20 50	Rubber Button BL	ゴムボタン			
	18	CB 00 58 30	Bushing	ブッシュ			
	19	CB 00 65 40	Rotary Stopper	回転止め			
	20	CB 80 84 00	Knob	ツマミ	VR, Switch		
※	21	CB 81 71 00	Card Reader Escutcheon	リーダーエスカッション			
※	22	CB 81 71 10	Switch Button -1	スイッチボタン			
※		CB 81 71 20	— do. — -2	〃			
※		CB 81 71 30	— do. — -3	〃			
※		CB 81 71 40	— do. — -4	〃			
※		CB 81 71 50	— do. — -5	〃			
※		CB 81 71 60	— do. — -6	〃			
※		CB 81 71 70	— do. — -7	〃			
※		CB 81 71 80	— do. — -8	〃			
※		CB 81 71 90	— do. — -9	〃			
※		CB 81 72 00	— do. — -10	〃			
※		CB 81 72 10	— do. — -11	〃			
※		CB 81 72 20	— do. — -12	〃			
※		CB 81 72 30	— do. — -13	〃			
※		CB 81 72 40	— do. — -14	〃			
※		CB 81 72 50	— do. — -15	〃			
※		CB 81 72 60	— do. — -16	〃			
※	23	CB 81 72 70	Push Button	プッシュボタン			
※	24	CB 81 74 20	Top Board Stay Holder	ロッドホルダー			
※	25	CC 01 46 20	Felt BL	フェルト			
	26	KA 90 17 20	Push Switch	プッシュスイッチ			
※	27	NA 80 70 20	Circuit Board PN-EQ #8614	PN-EQ シート			
※	28	NA 80 70 30	— do. — PN-SEL-R #8614	PN-SEL-R シート			
※	29	NA 80 70 40	— do. — PN-SEL-L #8614	PN-SEL-L シート			
※	30	NA 80 70 50	— do. — PN-TET #8614	PN-TET シート			
※	31	NA 80 70 70	— do. — PN-DEF #8614	PN-DEF シート			
※	32	NA 80 70 80	— do. — PN-EFF #8614	PN-EFF シート			
	33	NB 04 89 90	LED Unit	LED ユニット	Pilot Lamp		
※	34	NB 81 60 60	Card Reader Unit PCR-303S	カードリーダーユニット		GS2	
※	35	NX 80 01 30	Guide, Card Reader K03-0007	カードリーダー挿入口		GS2	
※	36	NX 80 01 10	Mech. Unit, — do. — K90-0799	メカユニット		GS2	
※	37	NX 80 01 20	Circuit Board, C/R K90-0711	C/R シート		GS2	

※ New Parts (新規部品)

Ref. No.	Part No.	Description		部品名	Remarks	Common Model	Markets
38	ED 33 00 50	Bind Screw	M3 x 5 BL	バインド小ネジ			
39	ED 33 01 00	– do. –	M3 x 10 BL	〃			
40	Ei 03 01 00	Bind Tapping Screw	3 x 10	バインドタッピングネジ			
41	Ei 03 01 20	– do. –	3 x 12	〃			
42	Ei 03 51 20	– do. –	3.5 x 12	〃			
43	Ei 34 01 60	– do. –	4 x 16 BL	〃			
44	EP 04 12 00	Flat Head Wood Screw	4.1 x 20 Ye	皿木ネジ			
45	EP 04 52 50	– do. –	4.5 x 25 Ye	〃			
46	EU 05 01 00	Wing Bolt	M5 x 10 Ye	蝶ボルト			
47	EV 22 00 70	Flat Washer	φ7	特殊平座金			
48	EV 43 00 50	Toothed Lock Washer	AB5S Ye	歯付座金			
49	EZ 30 70 10	Hexagonal Nut	M7	特殊六角ナット			
50	EZ 30 90 10	– do. –	M9	〃			
51	EX 00 01 00	Tap Tight Screw	M2 x 5 XA4-7200507	タップタイトネジ			
52	EX 00 01 10	– do. –	M2.6 x 6 E09-260002	〃			
53	LX 20 00 10	Flat Washer	φ9	特殊平座金			

※ New Parts (新規部品)

GS2 OVERALL CIRCUIT DIAGRAM

A | B | C | D | E | F

1 | 2 | 3 | 4 | 5 | 6 | 7 | 8

EFF 1/3

VIBRATO SPEED (PVR2) 600K

VIBRATO DEPTH (PVR3) 10K

TUNE (PVR-1) 85K

A 1/6 — Vibrato O.S.C

IC11 1/2 · IC11 2/2 · IC18 VCA IG02600

(Notes)
IC11 : NJM4558
IC18 : IG02600
Tr 9 : 2SC458
D5-8: 1S1555

R1 : IC18 VCA Rank

Rank	K	L	M
R1	68K	56K	27K

PEDAL UNIT 1/2

VIB TRE DAMP

VIB(BE) TRE(RE) DAMP(WH) E(BL) (4PP)

I/O UNIT 1/3 (8PP)

FOOT SWITCH (4PS)

EFF 2/3 DETUNE

(PSW1) (C2-2) SD1 (OR) (C2-1) SD2 (GR)

NO	C4
1	L7
2	L6
3	L5
4	L4
5	L3
6	L2
7	L1
8	L0

NO	C5	C6
1	C#2	G2
2	C#1	G1
3	D2	G#2
4	D1	G#1
5	D#2	A2
6	D#1	A1
7	E2	A#2
8	E1	A#1
9	F2	B2
10	F1	B1
11	F#2	C2
12	F#1	C1

K C — Master Clock Generator (2.22MHz)

L1 125µH · Tr1 · Tr2 · Tr3 · 180P X4 · R4 100K X10 (9/40) · 370KHz

SD1 (OR) DP1(C3-3) · DP2 (C3-4) · SD2 (GR) DP3(C3-5) · RP1(C3-6) · RP2(C3-7) · RP3 (C3-8) · DAMP (C3-9) (WH)

to DAMP (CN2-8)

R1 470K X12 · R2 470K X12

Key Coder

IC13 KC (YM3100)

Channel Processor

IC11 CP (YM3200)

OPTIONAL CIRCUIT

from IC2-1pin

(Note) IC3 : HD7417

MK4

C/N	1	2	3	4	5	6	7	8	9	10	11	12
C2	D#1	Vss	Vss	D#2	D1	Vss	Vss	D2	C#1	Vss	Vss	C#2
C3	F#1	Vss	Vss	F#2	F1	Vss	Vss	F2	E1	Vss	Vss	E2
C4	A1	Vss	Vss	A2	G#1	Vss	Vss	G#2	G1	Vss	Vss	G2
C5	C1	Vss	Vss	C2	B1	Vss	Vss	B2	A#1	Vss	Vss	A#2
C7	C1	C2	B1	B2	A#1	A#2	A1	A2	G#1	G#2	G1	G2
C8	F#1	F#2	F1	F2	B1	E2	D#1	D#2	D1	D2		
C9	C#1	C#2	Vss	Vss	Vss							

MK3

	1	2	3	4	5	6	7	8	9	10	11	12
C3	C1	C2	B1	B2	A#1	A#2	A1	A2	G#1	G#2	G1	G2
C1	F#1	F#2	F1	F2	E1	E2	D#1	D#2	D1	D2		
C2	C#1	C#2	Vss	Vss	Vss							

(Notes) D15-80 : 1S1555

RW

Line Driver IC21 (SN74LS366) — CMD 0 · CMD 1 · CMD 2 · PGM LK

Line Driver IC22 (HD74LS240) — MOTOR ON · WRITE · CARD LD · WI · WT PROT · R1 · RD · EXT

PGM UNIT

PGM LOCK · LOCK · UNLOCK · 4P-P

STO (PSW20)

STRD · WRT

3 to 8 Line Decoder IC28(HD74LS138)

Decoder IC23 (µPD8243)

Central Processing Unit IC24 (µPD8035) — 6MHZ

I/O Expansion Port IC23 (µPD8243)

Programmable 4bit Counter IC35(HD74LS161) · IC36(HD74LS161)

8bit Register IC34 (SN74LS273)

2K X8bit RAM IC30(TC5516) · (2K X8bit RAM) · GS1 only

2K X8bit EPROM IC33(MB8516)

Y1 · Y0 · CLK · INT · RD · WR · ALE · SCH · SKC · KCI · VSS · 16Y16 · 9Y9

GS2 OVERALL CIRCUIT DIAGRAM

002

	G	H	I	J	K	L

Two Phase (1.1MHz)

370KHz

OPTIONAL CIRCUIT IC3-5pin

IC1 IC2 IC4 IC5 IC8 IC9

Channel Processor

IC11 CP (YM31200)

Initial Touch Generator

IC12 IG (YM32000)

IC6 IC7

R3 4.7K X12

IC3 : HD7417

TEST

(Notes)
IC1,2 : HD7400 IC11 : YM31200
IC3,6,7 : HD7417 IC12 : YM32000
IC4 : TC4009 IC13 : YM31100
IC5 : HD7404 Tr1~3 : 2SC752
IC8,9 : SN75366 D1~8 : 1S2473
IC10 : HD74LS122 D9~11 : 10E-1
Tr4 : 2SC458

FM1

Key Code Data

Key Data

DI, DP, A2

Envelope Control Data

Initial Touch Data

Pitch Control Data

Tone Data

CN3

CN4

Buffer Tr7,8 D7,8

Buffer Tr5,6 D5,6

Buffer Tr3,4 D3,4

Buffer Tr1,2 D1,2

Carrier 1

Phase Generator PG IC13 (YM344)

IC14 – 31pin (16Y16)

Voice Register VRG IC1 (YM347)

Envel... Gener... EG IC...

Modulator 1

Phase Generator PG IC14 (YM344)

IC16 – 31pin (16Y16)

Voice Register VRG IC2 (YM347)

Modulator

Phase Generator IC15

Voice Register IC3

Carrier 2

Phase Generator IC16

Voice Register IC4

Digital Analog Converter

DAC IC24 (μPC610D)

Details of Buffers Marked-X

(Notes)
IC1~4 : YM347
IC5~8 : YM321
IC9~12 : YM322
IC13~16 : YM344
IC17,19 : YM34501
IC18,20 : YM34502
IC21,22 : YM316
IC23 : YM327
IC24 : μPC610D
IC25 : TC4051P
IC26 : TC4016P
Tr1,3,5,7 : 2SC1959
Tr2,4,6,8,14 : 2SA1015
Tr9~13,16 : 2SC458
FET1,2 : 2SK105
D1~10 : 1S2473

(Notes)
D1~80 : 1S1555

IC30 (TC5516) RAM X8bit RAM

IC33 (MB8516) X8bit EPROM

Bi-directional Bus Transceivers

IC25 (SN74LS245)

IC26 (SN74LS245)

26P FLAT CABLE

PGM UNIT

PROGRAMMER

CN

A 2/6 Buffer Amp

Mixing

Low Pass Filter

Symphonic Ensemble Control

RALL CIRCUIT DIAGRAM 002653

J K L M N O

FM1

Buffer Tr7,8 D7,8
Buffer Tr5,6 D5,6
Buffer Tr3,4 D3,4
Buffer Tr1,2 D1,2

Key Code Data
Key Data
DI, DP, A2
Envelope Control Data
Initial Touch Data
Pitch Control Data
Tone Data
Tone Data

Carrier 1
Phase Generator PG IC13 (YM344)
Operator (Carrier) OPC IC17 (YM345-1)
Voice Register VRG IC1 (YM347)
Envelope Generator EG IC5(YM321)
Envelope Controller EC IC9 (YM322)
Modulator 1
Phase Generator PG IC14 (YM344)
Operator (Modulator) OPM IC18 (YM345-2)
Voice Register VRG IC2 (YM347)
Envelope Generator EG IC6 (YM321)
Envelope Controller EC IC10 (YM322)

Accumulator
ACC IC21(YM31600)
Adder
ADD IC23(YM32700)
Accumulator
ACC IC22(YM31600)

Modulator 2
Phase Generator IC15
Voice Register IC3
Envelope Generator IC7
Operator (Modulator 2) IC19
Envelope Controller IC11
Carrier 2
Phase Generator IC16
Voice Register IC4
Envelope Generator IC8
Operator (Carrier 2) IC20
Envelope Controller IC12

Digital Analog Converter
DAC IC24 (μPC610D)
Multiplexer
MPX IC25 (TC4051)
IC26 Sample Hold

Details of Buffers Marked-X

(Notes)
IC1~4 : YM347
IC5~8 : YM321
IC9~12 : YM322
IC13~16 : YM344
IC17,19 : YM34501
IC18,20 : YM34502
IC21,22 : YM316
IC23 : YM327
IC24 : μPC610D
IC25 : TC4051P
IC26 : TC4016P
Tr1,3,5,7 : 2SC1959
Tr2,4,6,8,14 : 2SA1015
Tr9~13,16 : 2SC458
FET1,2 : 2SK105
D1~10 : 1S2473

PGM UNIT
PROGRAMMER

A 2/6
Buffer Amp
Analog Delay
Low Pass Filter
Mixing
Low Pass Filter
B.B.D Drive Clock Generator
Symphonic Ensemble Control

GS2 OVERALL CIRCUIT DIAGRAM

O P Q R S T

1 2 3 4 5 6 7 8

EFF 3/3 TREMOLO SPEED (PVR4) TREMOLO DEPTH (PVR5) Slow adj VR5 B500K 3.9K C250K A10K

TSI (C4-1,2) TSO (C4-3) TDI (C4-4) TDO (C4-5)

A 3/6 TRMSO (C6-5) TRMSI (C6-2) TRMDO (C6-11) IC12 1/2 1/2 47K 27K 4.7/16 8P +15 -15 VR5 B20K

(Note) IC12: NJM4558 Tremolo O.S.C

A 4/6 -15V Protector Tr12 Tr13 4.7K 10 470 4P LAMP (YE) (C3-2)

(Notes) Tr12: 2SA1015 Tr13: 2SC509

I/O UNIT 2/3 FOOT CONTROL 8P-P (BE) (BL) (YE) (WH) (GR) (GG) FOOT SWITCH 4P-S

PEDAL UNIT 2/2 VIB TRE DAMP DAMP (WH) TRE (RE) VIB (BE) E(BL) 4P-P

EQ VOLUME (PVR9) EQI1 (C1-4) EQI2 (C1-5) 560P 6.8K A50K 3.3/25 220 100K 47/16 BASS (PVR6) G50K 1/50 150 270 MID (PVR7) 0.1 180 TREBLE (PVR8) 0.047 1.5K +15 (C2-3) E (C2-5) (C1-1,2,3) -15 (C2-2) 2.2K 4.7K EQO1 (C2-4) EQO2 (C2-1)

(PVR9) IC1 1/2 (PVR6) (PVR7) (PVR8) IC3 2/2 IC2 1/2 IC4 1/2

(Note) IC1~4: NJM4558

A 5/6 TRMDI (C6-8) TRMSW (C6-7) TRMPD (C6-6) D9 D10 R2 22K 4.7K Gain Adj. VR6 B50K 100K 47K 10/16 10/25 180K VCA IC19 22/16 VR7 B50K 27K Modulation Adj. IC13 1/2 Tr11 680 100 EXP (C4-1) 10K 1K Tr14

PC1 PC2 Tremolo Modulation Circuit Level Balance VR8 B2K 68K 2.2K TRMI1 (C4-7) TRMI2 (C4-5) IC17 2/2 IC17 1/2 1.5K 120P 47P 22K 1K TR1 TR2 EXP.

(Notes) IC13,17: NJM4558 IC19 : IG02600 Tr11,14: 2SA509 D9,10 : 1S1555 PC1,2 : P873-13 R2: IC19 VCA Rank

Rank	K	L	M
R	68K	56K	27K

A 6/6 Phones Amp 47P 270K IC16 2/2 Tr20 Tr21 22K 820 100 120P HP ASSY 2/2 4P-P (RE) (BR) (BL) PHONES HPO1 (C3-3) HPO2 (C3-4)

I/O UNIT 3/3 (WH) MIXED OUT MIX (C2-4) E (C3-5) E (C2-1,2) IC16 1/2 +VCC -VEE 270P 100K

Mixed Out Amp IC15 2/2 IC15 1/2 OUT1 (C2-7) OUT2 (C2-6) E (C2-5) E (C2-3) 33K

Unbalanced Out Amp Muting Circuit IC14 TR1 TR2 OUTPUT 1 OUTPUT 2 (VI) (BE)

HP ASSY 1/2 LINE OUT ON OFF 4P-P (BL) (VI) LIN (C4-3) Tr18 Tr19 D12 D14 1M 470K 0.047 3.9K 100/10 +7.5 -7.5

Balanced Out Amp Tr22 Tr23 VCC 27K 47K 10/16 100 1000P 100/16 1K T1 T2 4.7K 39K BAL1B (C1-8) BAL1A (C1-7) BAL2B (C1-5) BAL2A (C1-4) E (C1-6) E (C1-3) E (C1-2) E (C1-1) (GR) (YE) (OR) (RE) BALANCED 1 BALANCED 2

Initial Clear Tr15 Tr16 Tr17 D11 120K 5.6K 47 33K 15K 220/16 IC (C5-2~4) to KC-IC (C1-3) CNB-IC (C6-5) (Initial Clear)

(Notes) IC14 : TC4016 IC15,16 : NJM4558 Tr 22,23 : 2SC458LG Tr15,18,19 : 2SC458 Tr 6,16 : 2SC509 Tr 7,17 : 2SA509 D11~16 : 1S1555 Tr 20 : 2SC1212A Tr 21 : 2SA743A

Tr6 Tr7 +15 +Vcc -Vee -15 -12 (C10-7) (C10-2) (C10-3-6) E 470/16 2.7K 12K 4.7/16 100 1000/16 100/16

AC U.S.AMERICAN MODEL CANADIAN MODEL VOLTAGE SELECTOR (SW2) 100V 120V (RE) (BE)

FET1 FET2 EO1 (OR) 1K 3.3/16 8P (C5-6) 100K

AO (C5-4) AO (C3-5) (GR) (GR) 10/16 1K 0.0056 NP

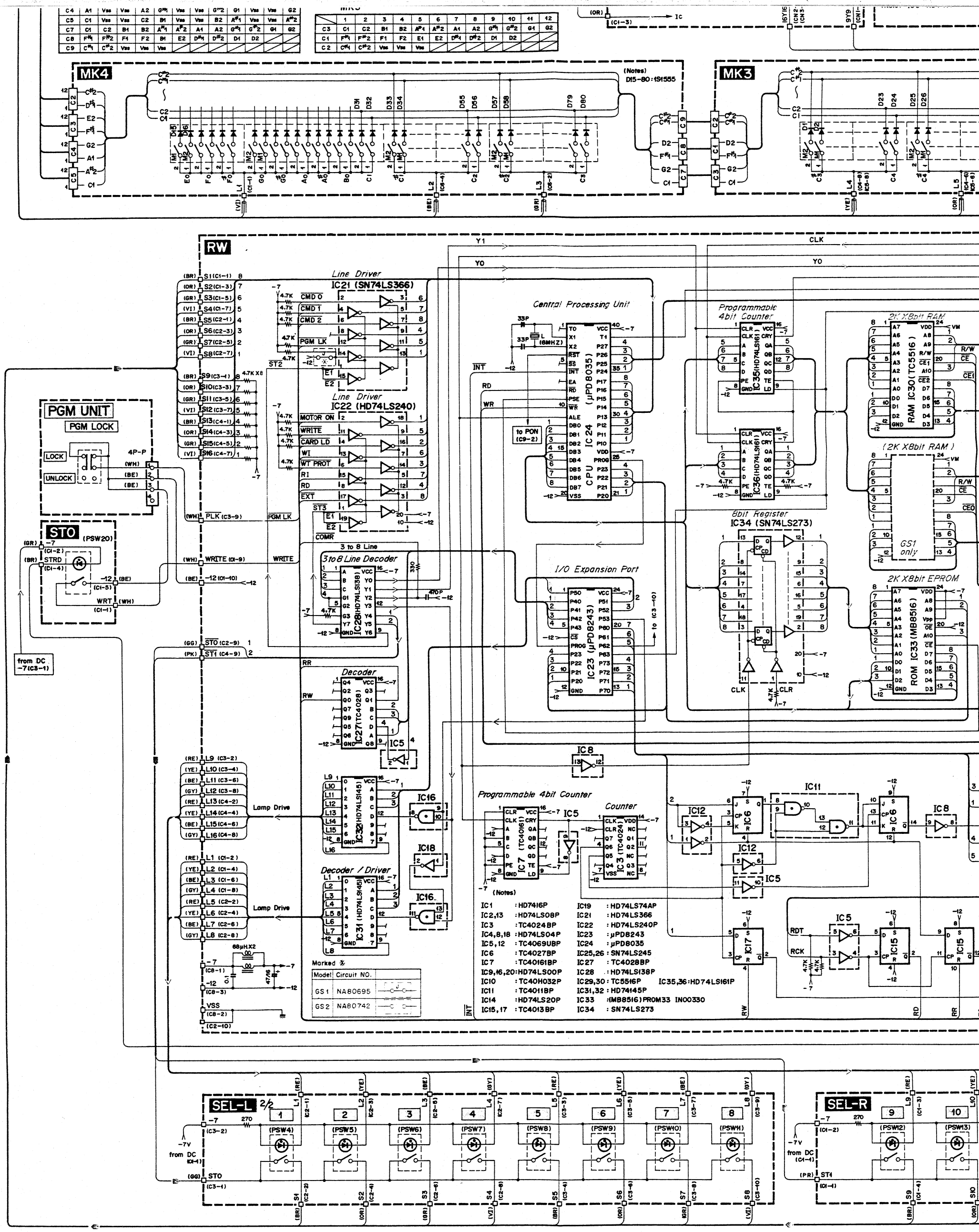

3 GS2 OVERALL CIRCUIT DIAGRAM

IC10 :HD74LS122 D9M:10E-1 Tr4 :2SC458

(C6-1)CM2 CM1 (C6-3)

(Notes)
D1～80 : 1S1555

D25 D26 D47 D48 D49 D50 D71 D72 D73 D74 D79 D80

M2 M1 C4 C6 D5 C6 C6 E6

L5 (C4-6) (C3-6) L6 (C4-4) (C3-4) L7 (C4-2) (C3-2)

(OR) (RE) (BR)

RAM IC30(TC5516)

ROM IC33 (MB8516)

IC16 IC19 ½ IC19 ½ IC8 IC9 IC13 IC2 IC4 IC1 IC10 IC12 IC15 IC11 IC18 IC20 IC14 ½ IC14 ⅔

LOAD1 (CN6-6)
LOAD2 (CN6-12)
D1A (CN6-7)
D4M (CN6-16)
D1A (CN5-17)
D4M (CN5-24)
READY (CN5-7)
BUSY (CN5-6)
CTRL1 (CN5-15)
CMD0 (CN5-8)
CMD1 (CN5-9)
CMD2 (CN5-10)
COMR (CN5-12)
G (CN5-1,3,5) (CN5-11,13) (CN5-25,26)
CTRL0 (CN5-14)
EXT (CN5-16)

Bi-directional Bus Transceivers
IC25 (SN74LS245)
IC26(SN74LS245)

to RST (IC24 Pin NO 4)
VM to RAM VM

(C9-1)－12 (BE)
(C9-2)PON (GR)
(C9-3) VBB (VI)

DC ½ C7 C8 PON

BB UNIT
Memory Buck UM3x2 UP
⊖(BE) ⊕(VI)

26P FLAT CABLE

CN

PGM UNIT
PROGRAMMER

CR UNIT
CARD READER

(C7-1)STRD
(C7-2) REV (RE) REV (C1-1) MOTOR REVERSE SIG.
(C7-3)MSW (OR) MOTOR DETECT SW
(C7-4)WPR (YE) WRITE PROTECT SIG.
(C7-5)WEN (GR) R/W CONTROL
(C7-6)WDT (BE) WRITE DATA
(C7-7) CLD (VI) CLD (C1-7) CARD LOAD SIG.
(C7-8) MON (GY) MON (C1-8) MOTOR CONTROL SIG.
(C7-9) RCK (WH) RCK (C1-9) DEMODULATION CLOCK PULSE
(C7-10) RDT (GG) RDT (C1-10) DEMODULATION DATA PULSE
(C7-11) －7 (GR) －7 (C1-11)
(C7-12) －12 (BE) －12 (C1-12)
－12 (C2-1,2)
－7 (C2-3) －7

from DC (C1-1,3)

(Notes)
Tr1 : 2SA509 D1 : IN34A
Tr2 : 2SC458 ZD : RD3.6EB1

Key Data
Tone Data
Phase Generator IC15
Voice Register IC3
Phase Generator IC16
Voice Register IC4
D2M D2A
Modulator
Carrier 2

Digital Analog Converter
DAC IC24 (μPC610D)

9Y9 (CN1-29)
16Y16 (CN1-30)(CN2-30)
VSS (C2-2)
－12 (C2-3)
＋15 (C2-4)
E (C2-5)
－15 (C2-6)

Details of Buffers Marked ✕

(Notes)
IC1～4 : YM347
IC5～8 : YM321
IC9～12 : YM322
IC13～16 : YM344
IC17,19 : YM34501
IC18,20 : YM34502
IC21,22 : YM316
IC23 : YM327
IC24 : μPC610D
IC25 : TC4051P
IC26 : TC4016P
Tr1,3,5,7 : 2SC1959
Tr2,4,6,8,14 : 2SA1015
Tr9～13,16 : 2SC458
FET1,2 : 2SK105
D1～10 : 1S2473

A 2/6 Buffer Amp
IC9 ½ IC9 ⅔
AI1 (C8-5)
AI2 (C8-1)

Mixing Low Pass Filter
IC10 ½ IC10 ⅔

Symphonic Ensemble Control
SEC III C(YM633)
Ens. Speed Adj. BIOK VR1

Buffer Amp

SEL-L ½ TREMOLO
(PSW 2)
IC1

PEDAL UNIT
FOOT SWITCH CONNECTOR 4P-P
VIBRATO TREMOLO DAMP
VIB (BE)
TRE (RE)
DAMP (WH)
E (BL)

FOOT CONTROLLER (FC-3)(Option)
E
OUT CDS
LAMP (24V 5W)

10 11 12 13 14 15 16
(PSW13) (PSW14) (PSW15) (PSW16) (PSW17) (PSW18) (PSW19)
L9 (C1-3) L10 (C1-5) L11 (C1-9) L12 (C1-9) L13 (C2-1) L14 (C2-3) L15 (C2-5) L16 (C2-7)
S9 (C1-4) S10 (C1-6) S11 (C1-8) S12 (C1-10) S13 (C2-2) S14 (C2-4) S15 (C2-6) S16 (C2-8)

F G H I J K L

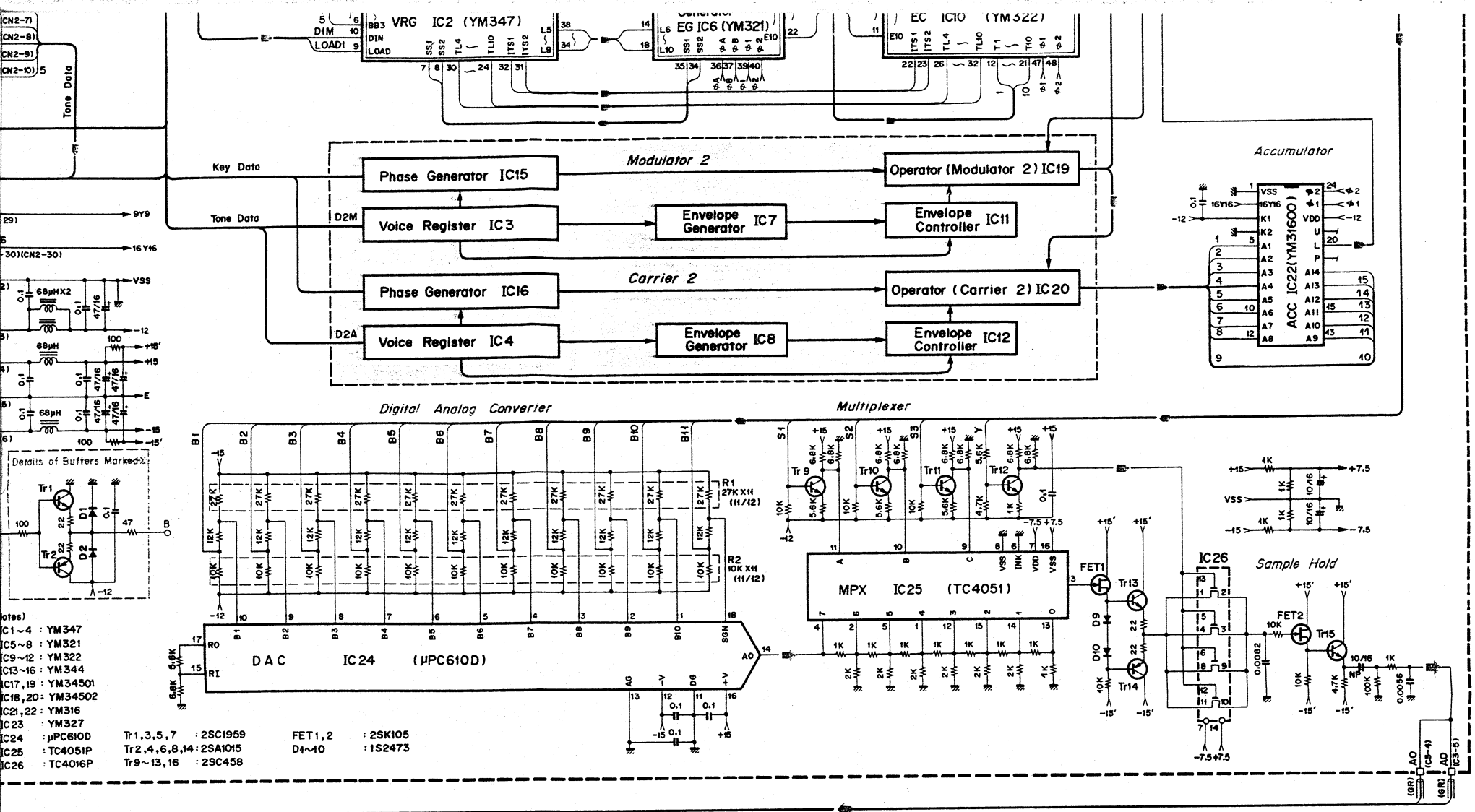

(Notes)

IC1~4	: YM347				
IC5~8	: YM321				
IC9~12	: YM322				
IC13~16	: YM344				
IC17,19	: YM34501				
IC18,20	: YM34502				
IC21,22	: YM316				
IC23	: YM327				
IC24	: μPC610D	Tr1,3,5,7	: 2SC1959	FET1,2	: 2SK105
IC25	: TC4051P	Tr2,4,6,8,14	: 2SA1015	D1~10	: 1S2473
IC26	: TC4016P	Tr9~13,16	: 2SC458		

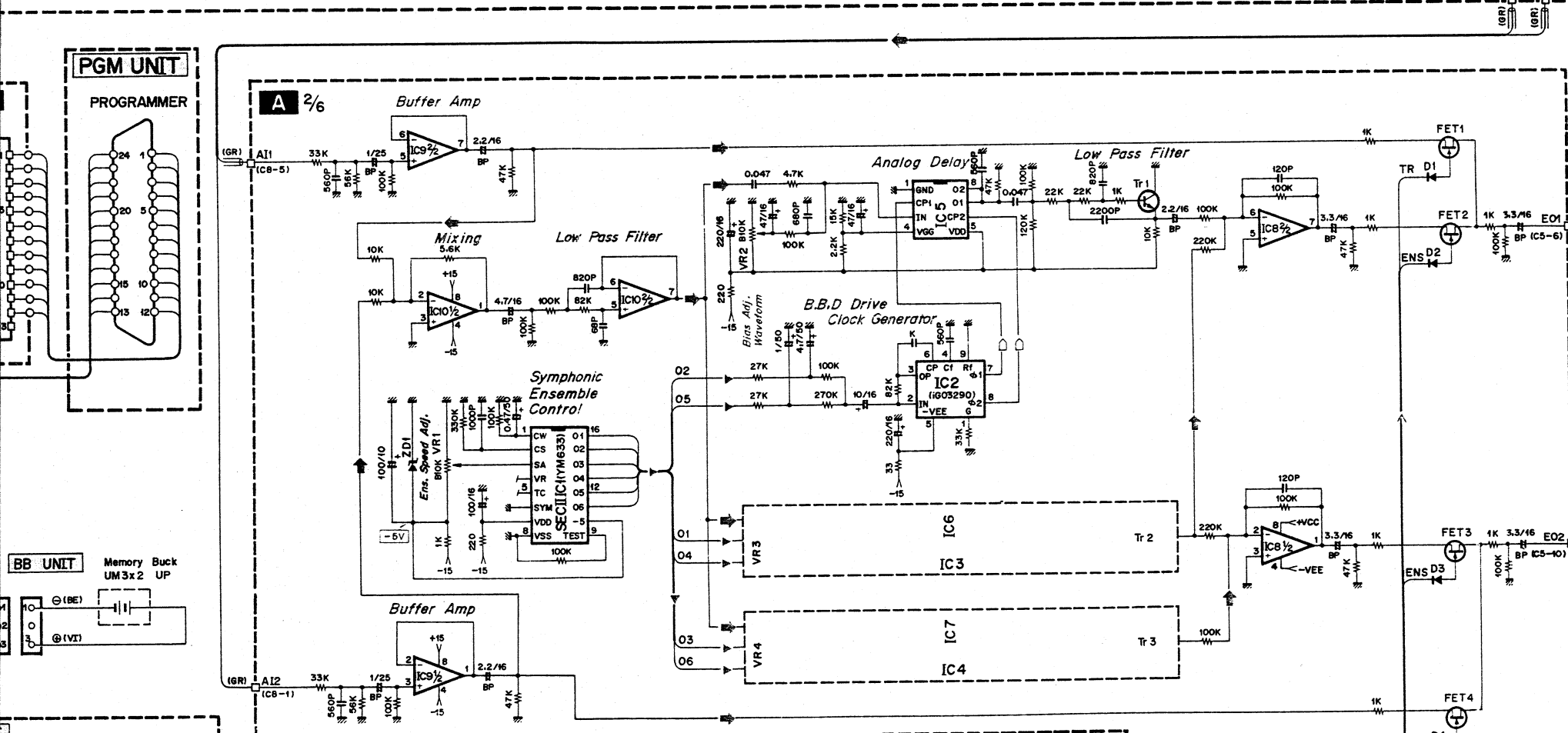

(Notes)

IC1,2	: BA634	Tr1,2	: 2SC509
D	: 1S1555		

(Notes)

IC1	: YM6330C
IC2~4	: IG03290
IC5~7	: MN3009
IC8~10	: NJM4558
Tr1~3	: 2SC458LG
Tr4,5	: 2SC458
FET1~4	: 2SK105
D1~4	: 1S1555(1S2473)
ZD1	: WZ050

NOTES:

1. All Resistors are 1/4 watt unless otherwise specified.
2. All Capacitors are in microfarads unless otherwise specified.
3. All Keyswitches, Tabswitches and Pushbutton Switches shown in "off" position.
4. Capacitors

   △ mark : Tantalum Capacitor
   ○ mark : Polystyrene Capacitor
   K mark : Ceramic Capacitor 1000pF
5. ABBREVIATIONS OF WIRE COLOR IN ELECTONE

BL	BLACK	RE	RED
YE	YELLOW	BE	BLUE
GY	GRAY	GG	GRASS GREEN
PK	PINK	OR	ORANGE
BR	BROWN	VI	VIOLET
GR	GREEN	SB	SKY BLUE
WH	WHITE	TP	TIN PLATED WIRE
TR	TRANSPARENT		

SOR ..... Shielding orange wire
SGRS..... Earthing conductor of shielding green wire

- Digital Data
- Audio Signal
- Clock Pulse
- Key Code Data
- DC Control
- Low Frequency Modulation Data
- Trigger Pulse

J	K	L	M	N	O

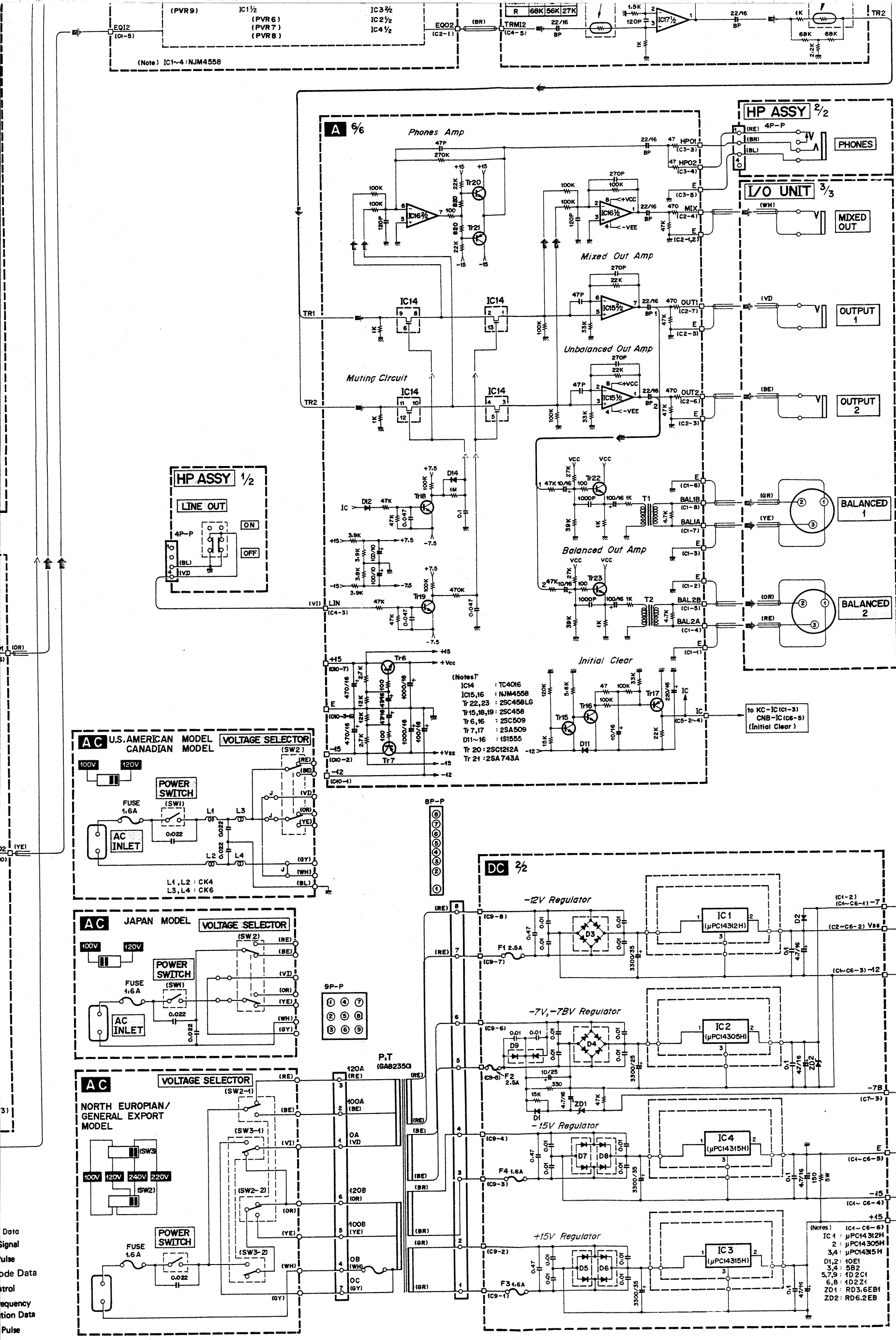

GS2 OVERALL CIRCUIT DIAGRAM 4

KC

C1

Pin No.	Pin Name	Wire Color	Destination
1	Vss	BL	EFF-Vss (C2-1)
2	VIB	RE	A-PC0 (C7-2)
3	IC	OR	A-IC (C5-2)
4	–	–	–
5	–	–	–

C2

Pin No.	Pin Name	Wire Color	Destination
1	φ2	–	–
2	16Y16	–	–
3	SCH	–	–
4	KCO	–	–
5	KCI	–	–
6	–12	–	–

C3

Pin No.	Pin Name	Wire Color	Destination
1	PS1	–	–
2	PS2	–	–
3	DP1	OR	EFF-DP1 (C2-2)
4	DP2	–	–
5	DP3	GR	EFF-DP3 (C2-3)
6	RP1	–	–
7	RP2	–	–
8	RP3	–	–
9	DAMP	WH	FC-P1-6 F/S4P-2
10	–	–	–

C4

Pin No.	Pin Name	Wire Color	Destination
1	L7	S BR	MK3-L7 (C4-2)
2	L6	S RE	MK3-L6 (C4-4)
3	L5	S OR	MK3-L5 (C4-6)
4	L4	S YE	MK3-L4 (C4-8)
5	L3	S GR	MK4-L3 (C6-2)
6	L2	S BE	MK4-L2 (C6-4)
7	L1	S VI	MK4-L1 (C1-1)
8	L0	–	–

C5

Pin No.	Pin Name	Wire Color	Destination
1	C≠2	S BR	MK4-C≠2 (C2-12)
2	C≠1	S RE	MK4-C≠1 (C2-9)
3	D2	S OR	MK4-D2 (C2-8)
4	D1	S YE	MK4-D1 (C2-5)
5	D≠2	S GR	MK4-D≠2 (C2-4)
6	D≠1	S BE	MK4-D≠1 (C2-1)
7	E2	S VI	MK4-E2 (C3-12)
8	E1	S GY	MK4-E1 (C3-9)
9	F2	S WH	MK4-F2 (C3-8)
10	F1	S GG	MK4-F1 (C3-5)
11	F≠2	S SB	MK4-F≠2 (C3-4)
12	F≠1	S PK	MK4-F≠1 (C3-1)

C6

Pin No.	Pin Name	Wire Color	Destination
1	G2	S BR	MK4-G2 (C4-12)
2	G1	S RE	MK4-G1 (C4-9)
3	G≠2	S OR	MK4-G≠2 (C4-8)
4	G≠1	S YE	MK4-G≠1 (C4-5)
5	A2	S GR	MK4-A2 (C4-4)
6	A1	S BE	MK4-A1 (C4-1)
7	A≠2	S VI	MK4-A≠2 (C5-12)
8	A≠1	S GY	MK4- A≠1 (C5-9)
9	B2	S WH	MK4-B2 (C5-8)
10	B1	S GG	MK4-B1 (C5-5)
11	C2	S SB	MK4-C2 (C5-4)
12	C1	S PK	MK4-C1 (C5-1)

C7

Pin No.	Pin Name	Wire Color	Destination
1	–7	GR	DC- –7 (C6-1)
2	Vss	BL	DC-Vss (C6-2)
3	–12	BE	DC- –12 (C6-3)
4	–	–	–
5	E	BL	DC-E (C6-5)
6	+15	OR	DC-+5 (C6-6)

C8

Pin No.	Pin Name	Wire Color	Destination
1	–	–	–
2	E10	YE	FM-E10 (C1-4)
3	E9	OR	FM-E9 (C1-3)
4	E8	RE	FM-E8 (C1-2)
5	E7	BR	FM-E7 (C1-1)

CN No.	CN Name	Destination
CN1	20P FLAT CABLE	(to RW-CN6)
CN2	30P FLAT CABLE	(to FM-CN1)
CN3	30P FLAT CABLE	(to FM-CN2)

FM

C1

Pin No.	Pin Name	Wire Color	Destination
1	E7	YE	KC-E7 (C8-5)
2	E8	YE	KC-E8 (C8-4)
3	E9	YE	KC-E9 (C8-3)
4	E10	YE	KC-E10 (C8-2)
5	–	–	–

C2

Pin No.	Pin Name	Wire Color	Destination
1	–	–	–
2	Vss	BL	DC-Vss (C5-2)
3	–12	BE	DC- –12 (C5-3)
4	+15	OR	DC-+15 (C5-6)
5	E	BL	DC-E (C5-5)
6	–15	BR	DC- –15 (C5-4)

C3

Pin No.	Pin Name	Wire Color	Destination
1	E	–	–
2	E	S GR S	
3	E	S BE S	
4	AO	S GR	A-AI1 (C8-5)
5	AO	S BE	A-AI2 (C8-1)

CN No.	CN Name	Destination
CN1	30P FLAT CABLE	(to KC-CN2)
CN2	20P FLAT CABLE	(to KC-CN3)

RW

C1

Pin No.	Pin Name	Wire Color	Destination
1	S1	BR	SELL-S1 (C2-2)
2	L1	RE	SELL-L1 (C2-1)
3	S2	OR	SELL-S2 (C2-4)
4	L2	YE	SELL-L2 (C2-3)
5	S3	GR	SELL-S3 (C2-6)
6	L3	BE	SELL-L3 (C2-5)
7	S4	VI	SELL-S4 (C2-8)
8	L4	GY	SELL-L4 (C2-7)
9	WRT	WH	STO-WRT (C1-1)
10	–12	BE	STO- –12 (C1-5)

C2

Pin No.	Pin Name	Wire Color	Destination
1	S5	BR	SELL-S5 (C3-4)
2	L5	RE	SELL-L5 (C3-3)
3	S6	OR	SELL-S6 (C3-6)
4	L6	YE	SELL-L6 (C3-5)
5	S7	GR	SELL-S7 (C3-8)
6	L7	BE	SELL-L7 (C3-7)
7	S8	VI	SELL-S8 (C3-10)
8	L8	GY	SELL-L8 (C3-9)
9	STO	GG	SELL-STO (C3-1)
10	Vss	–	–

C3

Pin No.	Pin Name	Wire Color	Destination
1	S1	BR	SELR-S1 (C1-4)
2	L9	RE	SELR-L9 (C1-3)
3	S2	OR	SELR-S2 (C1-6)
4	L10	YE	SELR-L10 (C1-5)
5	S3	GR	SELR-S3 (C1-8)
6	L11	BE	SELR-L11 (C1-7)
7	S4	VI	SELR-S4 (C1-10)
8	L12	GY	SELR-L12 (C1-9)
9	PLK	WH	LOCK SW-center terminal
10	S1	–	–

C4

Pin No.	Pin Name	Wire Color	Destination
1	S5	BR	SELR-S5 (C2-2)
2	L13	RE	SELR-L13 (C2-1)
3	S6	OR	SELR-S6 (C2-4)
4	L14	YE	SELR-L14 (C2-3)
5	S7	GR	SELR-S7 (C2-6)
6	L15	BE	SELR-L15 (C2-5)
7	S8	VI	SELR-S8 (C2-8)
8	L16	GY	SELR-L16 (C2-7)
9	ST1	PK	SELR-ST1 (C1-1)
10	Vss	–	–

C7

Pin No.	Pin Name	Wire Color	Destination
1	STRD	BR	STO-STRD (C1-4)
2	REV	RE	CR-REV (C1-1)
3	MSW	OR	CR-MSW (C1-6)
4	WPR	YE	CR-WPR (C1-5)
5	WEN	GR	CR-WEN (C1-3)
6	WDT	BE	CR-WDT (C1-4)
7	CLD	VI	CR-CLD (C1-7)
8	MON	GY	CR-MON (C1-8)
9	RCK	WH	CR-RCK (C1-9)
10	RDT	GG	CR-RDT (C1-10)
11	–7	GR	CR-+5V (V1-11)
12	–12	BE	CR-GND (C1-12)

C8

Pin No.	Pin Name	Wire Color	Destination
1	–7	GR	DC- –7 (C4-1)
2	Vss	BL	DC-Vss (C4-2)
3	–12	BE	DC- –12 (C4-3)
4	–	–	–
5	–	–	–
6	–	–	–

C9

Pin No.	Pin Name	Wire Color	Destination
1	–12	BE	DC- –12 (C7-1)
2	PON	GR	DC-PON (C7-3)
3	–7B	VI	DC- –7B (C7-5)

CN No.	CN Name	Destination
CN5	26P FLAT CABLE	(to PGM UNIT 24P CONNECTOR)
CN6	20P FLAT CABLE	(to KC-CN1)

M

C1

Pin No.	Pin Name	Wire Color	Destination
1	L1	S VI	KC-L1 (C4-7)
2	Vss	S VI S	
3	Vss	–	–
4	LO	–	–
5	–	–	–

C2

Pin No.	Pin Name	Wire Color	Destination
1	D≠1	S BE	KC-D≠1 (C5-6)
2	Vss	S BE S	
3	Vss	S GR S	
4	D≠2	S GR	KC-D≠2 (C5-5)
5	D1	S YE	KC-D1 (C5-4)
6	Vss	S YE S	
7	Vss	S OR S	
8	D2	S OR	KC-D2 (C5-3)
9	C≠1	S RE	KC-C≠1 (C5-2)
10	Vss	S RE S	
11	Vss	S BR S	
12	C≠2	S BR	KC-C≠2 (C5-1)

C3

Pin No.	Pin Name	Wire Color	Destination
1	F≠1	S PK	KC-F≠1 (C5-12)
2	Vss	S PK S	
3	Vss	S SB S	
4	F≠2	S SB	KC-F≠2 (C5-11)
5	F1	S GG	KC-F1 (C5-10)
6	Vss	S GG S	
7	Vss	S WH S	
8	F2	S WH	KC-F2 (C5-9)
9	E1	S GY	KC-E1 (C5-8)
10	Vss	S GY S	
11	Vss	S VI S	
12	E2	S VI	KC-E2 (C5-7)

C4

Pin No.	Pin Name	Wire Color	Destination
1	A1	S BE	KC-A1 (C6-6)
2	Vss	S BE S	
3	Vss	S GR S	
4	A2	S GR	KC-A2 (C6-5)
5	G≠1	S YE	KC-G≠1 (C6-4)
6	Vss	S YE S	
7	Vss	S OR S	
8	G≠2	S OR	KC-G≠2 (C6-3)
9	G1	S RE	KC-G1 (C6-2)
10	Vss	S RE S	
11	Vss	S BR S	
12	G2	S BR	KC-G2 (C6-1)

MK4

C1

Pin No.	Pin Name	Wire Color	Destination
1	L1	S VI	KC-L1 (C4-7)
2	Vss	S VI S	
3	Vss	–	–
4	LO	–	–
5	–	–	–

C2

Pin No.	Pin Name	Wire Color	Destination
1	D#1	S BE	KC-D#1 (C5-6)
2	Vss	S BE S	
3	Vss	S GR S	
4	D#2	S GR	KC-D#2 (C5-5)
5	D1	S YE	KC-D1 (C5-4)
6	Vss	S YE S	
7	Vss	S OR S	
8	D2	S OR	KC-D2 (C5-3)
9	C#1	S RE	KC-C#1 (C5-2)
10	Vss	S RE S	
11	Vss	S BR S	
12	C#2	S BR	KC-C#2 (C5-1)

C3

Pin No.	Pin Name	Wire Color	Destination
1	F#1	S PK	KC-F#1 (C5-12)
2	Vss	S PK S	
3	Vss	S SB S	
4	F#2	S SB	KC-F#2 (C5-11)
5	F1	S GG	KC-F1 (C5-10)
6	Vss	S GG S	
7	Vss	S WH S	
8	F2	S WH	KC-F2 (C5-9)
9	E1	S GY	KC-E1 (C5-8)
10	Vss	S GY S	
11	Vss	S VI S	
12	E2	S VI	KC-E2 (C5-7)

C4

Pin No.	Pin Name	Wire Color	Destination
1	A1	S BE	KC-A1 (C6-6)
2	Vss	S BE S	
3	Vss	S GR S	
4	A2	S GR	KC-A2 (C6-5)
5	G#1	S YE	KC-G#1 (C6-4)
6	Vss	S YE S	
7	Vss	S OR S	
8	G#2	S OR	KC-G#2 (C6-3)
9	G1	S RE	KC-G1 (C6-2)
10	Vss	S RE S	
11	Vss	S BR S	
12	G2	S BR	KC-G2 (C6-1)

C5

Pin No.	Pin Name	Wire Color	Destination
1	C1	S PK	KC-C1 (C6-12)
2	Vss	S PK S	
3	Vss	S SB S	
4	C2	S SB	KC-C2 (C6-11)
5	B1	S GG	KC-B1 (C6-10)
6	Vss	S GG S	
7	Vss	S WH S	
8	B2	S WH	KC-B2 (C6-9)
9	A#1	S GY	KC-A#1 (C6-8)
10	Vss	S GY S	
11	Vss	S VI S	
12	A#2	S VI	KC-A#2 (C6-7)

C6

Pin No.	Pin Name	Wire Color	Destination
1	Vss	–	–
2	L3	S GR	KC-L3 (C4-5)
3	Vss	S GR S	
4	L2	S BE	KC-L2 (C4-6)
5	Vss	S BE S	

C7

Pin No.	Pin Name	Wire Color	Destination
1	C1	BR	MK3-C1 (C3-1)
2	C2	RE	MK3-C2 (C3-2)
3	B1	OR	MK3-B1 (C3-3)
4	B2	YE	MK3-B2 (C3-4)
5	A#1	GR	MK3-A#1 (C3-5)
6	A#2	BE	MK3-A#2 (C3-6)
7	A1	VI	MK3-A1 (C3-7)
8	A2	GY	MK3-A2 (C3-8)
9	G#1	WH	MK3-G#1 (C3-9)
10	G#2	GG	MK3-G#2 (C3-10)
11	G1	SB	MK3-G1 (C3-11)
12	G2	PK	MK3-G2 (C3-12)

C8

Pin No.	Pin Name	Wire Color	Destination
1	F#1	BR	MK3-F#1 (C1-1)
2	F#2	RE	MK3-F#2 (C1-2)
3	F1	OR	MK3-F1 (C1-3)
4	F2	YE	MK3-F2 (C1-4)
5	E1	GR	MK3-E1 (C1-5)
6	E2	BE	MK3-E2 (C1-6)
7	D#1	VI	MK3-D#1 (C1-7)
8	D#2	GY	MK3-D#2 (C1-8)
9	D1	WH	MK3-D1 (C1-9)
10	D2	GG	MK3-D2 (C1-10)

C9

Pin No.	Pin Name	Wire Color	Destination
1	C#1	SB	MK3-C#1 (C2-1)
2	C#2	PK	MK3-C#2 (C2-2)
3	Vss	BL	MK3-Vss (C2-3)
4	Vss	BL	MK3-Vss (C2-4)
5	Vss	BL	DC-Vss (C2-2)

MK3

C1

Pin No.	Pin Name	Wire Color	Destination
1	F#1	BR	MK4-F#1 (C8-1)
2	F#2	RE	MK4-F#2 (C8-2)
3	F1	OR	MK4-F1 (C8-3)
4	F2	YE	MK4-F2 (C8-4)
5	E1	GR	MK4-E1 (C8-5)
6	E2	BE	MK4-E2 (C8-6)
7	D#1	VI	MK4-D#1 (C8-7)
8	D#2	GY	MK4-D#2 (C8-8)
9	D1	WH	MK4-D1 (C8-9)
10	D2	GG	MK4-D2 (C8-10)

C2

Pin No.	Pin Name	Wire Color	Destination
1	C#1	SB	MK4-C#1 (C9-1)
2	C#2	PK	MK4-C#2 (C9-2)
3	Vss	BL	MK4-Vss (C9-3)
4	Vss	BL	MK4-Vss (C9-4)
5	Vss	–	–

C3

Pin No.	Pin Name	Wire Color	Destination
1	C1	BR	MK4-C1 (C7-1)
2	C2	RE	MK4-C2 (C7-2)
3	B1	OR	MK4-B1 (C7-3)
4	B2	YE	MK4-B2 (C7-4)
5	A#1	GR	MK4-A#1 (C7-5)
6	A#2	BE	MK4-A#2 (C7-6)
7	A1	VI	MK4-A1 (C7-7)
8	A2	GY	MK4-A2 (C7-8)
9	G#1	WH	MK4-G#1 (C7-9)
10	G#2	GG	MK4-G#2 (C7-10)
11	G1	SB	MK4-G1 (C7-11)
12	G2	PK	MK4-G2 (C7-12)

C4

Pin No.	Pin Name	Wire Color	Destination
1	Vss	S BR S	
2	L7	S BR	KC-L7 (C4-1)
3	Vss	S RE S	
4	L6	S RE	KC-L6 (C4-2)
5	Vss	S OR S	
6	L5	S OR	KC-L5 (C4-3)
7	Vss	S YE S	
8	L4	S YE	KC-L4 (C4-4)

C5

Pin No.	Pin Name	Wire Color	Destination
1	Vss		TEST POINT
2	L7		TEST POINT
3	Vss		TEST POINT
4	L6		TEST POINT
5	Vss		TEST POINT
6	L5		TEST POINT
7	Vss		TEST POINT
8	L4		TEST POINT

C6

Pin No.	Pin Name	Wire Color	Destination
1	CM1		TEST POINT
2	–	–	–
3	CM2		TEST POINT

A

C1

Pin No.	Pin Name	Wire Color	Destination
1	E	S RE S	BAL2 OUT-PIN1
2	E	S OR S	BAL2 OUT-PIN1
3	E	S YE S	BAL1 OUT-PIN1
4	BAL2A	S RE	BAL2 OUT-PIN2
5	BAL2B	S OR	BAL2 OUT-PIN3
6	E	S GR S	BAL1 OUT-PIN1
7	BAL1A	S YE	BAL1 OUT-PIN2
8	BAL1B	S GR	BAL1 OUT-PIN3

C2

Pin No.	Pin Name	Wire Color	Destination
1	E	S WH S	MIXED OUT-PIN5-E
2	E	–	–
3	E	S BE S	OUTPUT2-PIN5-E
4	MIX	S WH	MIXED OUT-PIN7-HOT
5	E	S VI S	OUTPUT1-PIN5-E
6	OUT2	S BE	OUTPUT2-PIN7-HOT
7	OUT1	S VI	OUTPUT1-PIN7-HOT

C3

Pin No.	Pin Name	Wire Color	Destination
1	E	BL	MKL-EP
2	LAMP	YE	FC-P1-3 F/C-J-pin2
3	HPO1	BR	HP-P1-2 HP-J-R
4	HPO2	RE	HP-P1-1 HP-J-L
5	E	BL	HP-P1-3 HP-J-E

C4

Pin No.	Pin Name	Wire Color	Destination
1	EXP	BE	FC-P1-1 F/C-J-pin4
2	E	BL	FC-P1-2 F/C-J-pin3,8
3	LIN	VI	HP-P1-4 LINE SW Center Terminal
4	E	–	–
5	TRMI2	S BR	EQ-TRMI2 (C2-1)
6	E	S BR S	
7	TRMI1	S RE	EQ-TRMI1 (C2-4)
8	E	S RE S	

C5

Pin No.	Pin Name	Wire Color	Destination
1	–	–	–
2	IC	OR	KC-IC (C1-3)
3	IC	–	–
4	IC	–	–
5	E	–	–
6	EO1	S OR	EQ-EO1 (C1-4)
7	E	S OR S	
8	ENSS	GR	SELL-ENSS (C1-4)
9	E	S YE S	
10	EO2	S YE	EQ-EO2 (C1-5)

C6

Pin No.	Pin Name	Wire Color	Destination
1	TRMDO	RE	EFF-TRMDO (C4-4)
2	TRMSI	OR	EFF-TRMSI (C4-3)
3	–	–	–
4	E	–	–
5	TRMSO	YE	EFF-TRMSO (C4-2)
6	TRMPD	GR	FC-P1-7 F/S4P-3
7	TRMSW	BE	SELL-TRMSW (C1-1)
8	TRMDI	BR	EFF-TRMDI (C4-5)

C7

Pin No.	Pin Name	Wire Color	Destination
1	PC3	GR	EFF-PC3 (C1-2)
2	PC0	RE	KC-VIB (C1-2)
3	PC2	OR	EFF-PC2 (C1-3)
4	PC1	YE	EFF-PC1 (C1-4)
5	E	BL	EFF-E (C1-1)

C8

Pin No.	Pin Name	Wire Color	Destination
1	AI2	S BE	FM-AO (C3-5)
2	E	–	–
3	E	–	–
4	E	S GR S	FM-E (C3-2)
5	AI1	S GR	FM-AO (C3-4)

C9

Pin No.	Pin Name	Wire Color	Destination
1	VIBSP	VI	EFF-VIBSP (C3-3)
2	VIBPD	GG	FC-P1-8 F/S4P-4
3	–	–	–
4	VIBDI	GR	EFF-VIBDI (C3-5)
5	E	–	–
6	–	–	–
7	VIBDO	BE	EFF-VIBDO (C3-4)

C10

Pin No.	Pin Name	Wire Color	Destination
1	–12	BE	DC- –12 (C3-3)
2	–15	BR	DC- –15 (C3-4)
3	E	–	–
4	E	–	–
5	E	–	–
6	E	BL	DC-E (C3-5)
7	+15	OR	DC-+15 (C3-6)

EFF

C1

Pin No.	Pin Name	Wire Color	Destination
1	E	BL	A-E (C7-5)
2	PC3	GR	A-PC3 (C7-1)
3	PC2	OR	A-PC2 (C7-3)
4	PC1	YE	A-PC1 (C7-4)
5	E	BL	EFF-E (C1-1)

C2

Pin No.	Pin Name	Wire Color	Destination
1	Vss	BL	KC-Vss (C1-1)
2	DP1	OR	KC-DP1 (C3-3)
3	DP3	GR	KC-DP3 (C3-5)
4	–	–	–
5	–	–	–

C3

Pin No.	Pin Name	Wire Color	Destination
1	–	–	–
2	E	BL	PIT-C1-5
3	VIBSP	VI	A-VIBSP (C9-1)
4	VIBDO	BE	A-VIBDO (C9-7)
5	VIBDI	GR	A-VIBDI (C9-4)

C4

Pin No.	Pin Name	Wire Color	Destination
1	–	–	–
2	TRMSO	YE	A-TRMSO (C6-5)
3	TRMSI	OR	A-TRMSI (C6-2)
4	TRMDO	RE	A-TRMDO (C6-1)
5	TRMDI	BR	A-TRMDI (C6-8)

Pin No.
1
2
3
4
5

Pin No.
1
2
3
4
5
6
7
8

Pin No.
1
2
3
4
5
6
7
8
9
10

Pin No.
1
2
3
4
5
6
7
8
9
10

Pin No.
1
2
3
4
5
6
7
8

4

C5

Pin No.	Pin Name	Wire Color	Destination
1	C1	S PK	KC-C1 (C6-12)
2	Vss	S PK S	
3	Vss	S SB S	
4	C2	S SB	KC-C2 (C6-11)
5	B1	S GG	KC-B1 (C6-10)
6	Vss	S GG S	
7	Vss	S WH S	
8	B2	S WH	KC-B2 (C6-9)
9	A≠1	S GY	KC-A≠1 (C6-8)
10	Vss	S GY S	
11	Vss	S VI S	
12	A≠2	S VI	KC-A≠2 (C6-7)

C6

Pin No.	Pin Name	Wire Color	Destination
1	Vss	–	–
2	L3	S GR	KC-L3 (C4-5)
3	Vss	S GR S	
4	L2	S BE	KC-L2 (C4-6)
5	Vss	S BE S	

C7

Pin No.	Pin Name	Wire Color	Destination
1	C1	BR	MK3-C1 (C3-1)
2	C2	RE	MK3-C2 (C3-2)
3	B1	OR	MK3-B1 (C3-3)
4	B2	YE	MK3-B2 (C3-4)
5	A≠1	GR	MK3-A≠1 (C3-5)
6	A≠2	BE	MK3-A≠2 (C3-6)
7	A1	VI	MK3-A1 (C3-7)
8	A2	GY	MK3-A2 (C3-8)
9	G≠1	WH	MK3-G≠1 (C3-9)
10	G≠2	GG	MK3-G≠2 (C3-10)
11	G1	SB	MK3-G1 (C3-11)
12	G2	PK	MK3-G2 (C3-12)

C8

Pin No.	Pin Name	Wire Color	Destination
1	F≠1	BR	MK3-F≠1 (C1-1)
2	F≠2	RE	MK3-F≠2 (C1-2)
3	F1	OR	MK3-F1 (C1-3)
4	F2	YE	MK3-F2 (C1-4)
5	E1	GR	MK3-E1 (C1-5)
6	E2	BE	MK3-E2 (C1-6)
7	D≠1	VI	MK3-D≠1 (C1-7)
8	D≠2	GY	MK3-D≠2 (C1-8)
9	D1	WH	MK3-D1 (C1-9)
10	D2	GG	MK3-D2 (C1-10)

C9

Pin No.	Pin Name	Wire Color	Destination
1	C≠1	SB	MK3-C≠1 (C2-1)
2	C≠2	PK	MK3-C≠2 (C2-2)
3	Vss	BL	MK3-Vss (C2-3)
4	Vss	BL	MK3-Vss (C2-4)
5	Vss	BL	DC-Vss (C2-2)

MK3

C1

Pin No.	Pin Name	Wire Color	Destination
1	F≠1	BR	MK4-F≠1 (C8-1)
2	F≠2	RE	MK4-F≠2 (C8-2)
3	F1	OR	MK4-F1 (C8-3)
4	F2	YE	MK4-F2 (C8-4)
5	E1	GR	MK4-E1 (C8-5)
6	E2	BE	MK4-E2 (C8-6)
7	D≠1	VI	MK4-D≠1 (C8-7)
8	D≠2	GY	MK4-D≠2 (C8-8)
9	D1	WH	MK4-D1 (C8-9)
10	D2	GG	MK4-D2 (C8-10)

C2

Pin No.	Pin Name	Wire Color	Destination
1	C≠1	SB	MK4-C≠1 (C9-1)
2	C≠2	PK	MK4-C≠2 (C9-2)
3	Vss	BL	MK4-Vss (C9-3)
4	Vss	BL	MK4-Vss (C9-4)
5	Vss	–	–

C3

Pin No.	Pin Name	Wire Color	Destination
1	C1	BR	MK4-C1 (C7-1)
2	C2	RE	MK4-C2 (C7-2)
3	B1	OR	MK4-B1 (C7-3)
4	B2	YE	MK4-B2 (C7-4)
5	A≠1	GR	MK4-A≠1 (C7-5)
6	A≠2	BE	MK4-A≠2 (C7-6)
7	A1	VI	MK4-A1 (C7-7)
8	A2	GY	MK4-A2 (C7-8)
9	G≠1	WH	MK4-G≠1 (C7-9)
10	G≠2	GG	MK4-G≠2 (C7-10)
11	G1	SB	MK4-G1 (C7-11)
12	G2	PK	MK4-G2 (C7-12)

C4

Pin No.	Pin Name	Wire Color	Destination
1	Vss	S BR S	
2	L7	S BR	KC-L7 (C4-1)
3	Vss	S RE S	
4	L6	S RE	KC-L6 (C4-2)
5	Vss	S OR S	
6	L5	S OR	KC-L5 (C4-3)
7	Vss	S YE S	
8	L4	S YE	KC-L4 (C4-4)

C5

Pin No.	Pin Name	Wire Color	Destination
1	Vss		TEST POINT
2	L7		TEST POINT
3	Vss		TEST POINT
4	L6		TEST POINT
5	Vss		TEST POINT
6	L5		TEST POINT
7	Vss		TEST POINT
8	L4		TEST POINT

C6

Pin No.	Pin Name	Wire Color	Destination
1	CM1		TEST POINT
2	–	–	–
3	CM2		TEST POINT

A

C1

Pin No.	Pin Name	Wire Color	Destination
1	E	S RE S	BAL2 OUT-PIN1
2	E	S OR S	BAL2 OUT-PIN1
3	E	S YE S	BAL1 OUT-PIN1
4	BAL2A	S RE	BAL2 OUT-PIN2
5	BAL2B	S OR	BAL2 OUT-PIN3
6	E	S GR S	BAL1 OUT-PIN1
7	BAL1A	S YE	BAL1 OUT-PIN2
8	BAL1B	S GR	BAL1 OUT-PIN3

C2

Pin No.	Pin Name	Wire Color	Destination
1	E	S WH S	MIXED OUT-PIN5-E
2	E	–	–
3	E	S BE S	OUTPUT2-PIN5-E
4	MIX	S WH	MIXED OUT-PIN7-HOT
5	E	S VI S	OUTPUT1-PIN5-E
6	OUT2	S BE	OUTPUT2-PIN7-HOT
7	OUT1	S VI	OUTPUT1-PIN7-HOT

C3

Pin No.	Pin Name	Wire Color	Destination
1	E	BL	MKL-EP
2	LAMP	YE	FC-P1-3 F/C-J-pin2
3	HPO1	BR	HP-P1-2 HP-J-R
4	HPO2	RE	HP-P1-1 HP-J-L
5	E	BL	HP-P1-3 HP-J-E

C4

Pin No.	Pin Name	Wire Color	Destination
1	EXP	BE	FC-P1-1 F/C-J-pin4
2	E	BL	FC-P1-2 F/C-J-pin3,8
3	LIN	VI	HP-P1-4 LINE SW Center Terminal
4	E	–	–
5	TRMI2	S BR	EQ-TRMI2 (C2-1)
6	E	S BR S	
7	TRMI1	S RE	EQ-TRMI1 (C2-4)
8	E	S RE S	

C5

Pin No.	Pin Name	Wire Color	Destination
1	–	–	–
2	IC	OR	KC-IC (C1-3)
3	IC	–	–
4	IC	–	–
5	E	–	–
6	EO1	S OR	EQ-EO1 (C1-4)
7	E	S OR S	
8	ENSS	GR	SELL-ENSS (C1-4)
9	E	S YE S	
10	EO2	S YE	EQ-EO2 (C1-5)

C6

Pin No.	Pin Name	Wire Color	Destination
1	TRMDO	RE	EFF-TRMDO (C4-4)
2	TRMSI	OR	EFF-TRMSI (C4-3)
3	–	–	–
4	E	–	–
5	TRMSO	YE	EFF-TRMSO (C4-2)
6	TRMPD	GR	FC-P1-7 F/S4P-3
7	TRMSW	BE	SELL-TRMSW (C1-1)
8	TRMDI	BR	EFF-TRMDI (C4-5)

C7

Pin No.	Pin Name	Wire Color	Destination
1	PC3	GR	EFF-PC3 (C1-2)
2	PC0	RE	KC-VIB (C1-2)
3	PC2	OR	EFF-PC2 (C1-3)
4	PC1	YE	EFF-PC1 (C1-4)
5	E	BL	EFF-E (C1-1)

C8

Pin No.	Pin Name	Wire Color	Destination
1	AI2	S BE	FM-AO (C3-5)
2	E	–	–
3	E	–	–
4	E	S GR S	FM-E (C3-2)
5	AI1	S GR	FM-AO (C3-4)

C9

Pin No.	Pin Name	Wire Color	Destination
1	VIBSP	VI	EFF-VIBSP (C3-3)
2	VIBPD	GG	FC-P1-8 F/S4P-4
3	–	–	–
4	VIBDI	GR	EFF-VIBDI (C3-5)
5	E	–	–
6	–	–	–
7	VIBDO	BE	EFF-VIBDO (C3-4)

C10

Pin No.	Pin Name	Wire Color	Destination
1	–12	BE	DC- –12 (C3-3)
2	–15	BR	DC- –15 (C3-4)
3	E	–	–
4	E	–	–
5	E	–	–
6	E	BL	DC-E (C3-5)
7	+15	OR	DC-+15 (C3-6)

EFF

C1

Pin No.	Pin Name	Wire Color	Destination
1	E	BL	A-E (C7-5)
2	PC3	GR	A-PC3 (C7-1)
3	PC2	OR	A-PC2 (C7-3)
4	PC1	YE	A-PC1 (C7-4)
5	E	BL	EFF-E (C1-1)

C2

Pin No.	Pin Name	Wire Color	Destination
1	Vss	BL	KC-Vss (C1-1)
2	DP1	OR	KC-DP1 (C3-3)
3	DP3	GR	KC-DP3 (C3-5)
4	–	–	–
5	–	–	–

C3

Pin No.	Pin Name	Wire Color	Destination
1	–	–	–
2	E	BL	PIT-C1-5
3	VIBSP	VI	A-VIBSP (C9-1)
4	VIBDO	BE	A-VIBDO (C9-7)
5	VIBDI	GR	A-VIBDI (C9-4)

C4

Pin No.	Pin Name	Wire Color	Destination
1	–	–	–
2	TRMSO	YE	A-TRMSO (C6-5)
3	TRMSI	OR	A-TRMSI (C6-2)
4	TRMDO	RE	A-TRMDO (C6-1)
5	TRMDI	BR	A-TRMDI (C6-8)

SELL

C1

Pin No.	Pin Name	Wire Color	Destination
1	TRMSW	BE	A-TRMSW (C6-7)
2	Vss	BL	DC-Vss (C1-5)
3	–	–	–
4	ENSS	GR	A-ENSS (C5-8)
5	–12	BE	DC- –12 (C1-3)

C2

Pin No.	Pin Name	Wire Color	Destination
1	L1	RE	RW-L1 (C1-2)
2	S1	BR	RW-S1 (C1-1)
3	L2	YE	RW-L2 (C1-4)
4	S2	OR	RW-S2 (C1-3)
5	L3	BE	RW-L3 (C1-6)
6	S3	GR	RW-S3 (C1-5)
7	L4	GY	RW-L4 (C1-8)
8	S4	VI	RW-S4 (C1-7)

C3

Pin No.	Pin Name	Wire Color	Destination
1	STO	GG	RW-STO (C2-9)
2	–7	GR	DC- –7 (C1-1)
3	L5	RE	RW-L5 (C2-2)
4	S5	BR	RW-S5 (C2-1)
5	L6	YE	RW-L6 (C2-4)
6	S6	OR	RW-S6 (C2-3)
7	L7	BE	RW-L7 (C2-6)
8	S7	GR	RW-S7 (C2-5)
9	L8	GY	RW-L8 (C2-8)
10	S8	VI	RW-S8 (C2-7)

SELR

C1

Pin No.	Pin Name	Wire Color	Destination
1	ST1	PK	RW-ST1 (C4-9)
2	–7	GR	DC- –7 (C5-1)
3	L9	RE	RW-L9 (C3-2)
4	S1	BR	RW-S1 (C3-1)
5	L10	YE	RW-L10 (C3-4)
6	S2	OR	RW-S2 (C3-3)
7	L11	BE	RW-L11 (C3-6)
8	S3	GR	RW-S3 (C3-5)
9	L12	GY	RW-L12 (C3-8)
10	S4	VI	RW-S4 (C3-7)

C2

Pin No.	Pin Name	Wire Color	Destination
1	L13	RE	RW-L13 (C4-2)
2	S5	BR	RW-S5 (C4-1)
3	L14	YE	RW-L14 (C4-4)
4	S6	OR	RW-S6 (C4-3)
5	L15	BE	RW-L15 (C4-6)
6	S7	GR	RW-S7 (C4-5)
7	L16	GY	RW-L16 (C4-8)
8	S8	VI	RW-S8 (C4-7)

S

Pin No.	Pin Name	W Co
1	E	
2	E	
3	E	
4	EO1	S O
5	EO2	S Y

Pin No.	Pin Name	W Co
1	TRMI2	S B
2	–15	B
3	+15	O
4	TRMI1	S R
5	E	B

Pin No.	Pin Name	W Co
1	WRT	W
2	–7	G
3	–	
4	STRD	B
5	–12	B

Pin No.	Pin Name	W Co
1	REV	
2	–	
3	WEN	G
4	WDT	
5	WPR	
6	MSW	G
7	CLD	
8	MON	G
9	RCK	W
10	RDT	G
11	+5V	G
12	GND	

Pin No.	Pin Name	W Co
1	MG	
2	MG	
3	M5V	G

EQ

C1

Pin No.	Pin Name	Wire Color	Destination
1	E	–	–
2	E	–	–
3	E	–	–
4	EO1	S OR	A-EO1 (C5-6)
5	EO2	S YE	A-EO2 (C5-10)

C2

Pin No.	Pin Name	Wire Color	Destination
1	TRMI2	S BR	A-TRMI2 (C4-5)
2	–15	BR	DC- –15 (C2-4)
3	+15	OR	DC-+15 (C2-6)
4	TRMI1	S RE	A-TRMI1 (C4-7)
5	E	BL	DC-E (C2-5)

STO

C1

Pin No.	Pin Name	Wire Color	Destination
1	WRT	WH	RW-WRT (C1-9)
2	–7	GR	DC- –7 (C3-1)
3	–	–	–
4	STRD	BR	RW-STRD (C7-1)
5	–12	BE	LOCK SW-LOCK terminal

CR

C1

Pin No.	Pin Name	Wire Color	Destination
1	REV	RE	RW-REV (C7-2)
2	–	–	–
3	WEN	GR	RW-WEN (C7-5)
4	WDT	RE	RW-WDT (C7-6)
5	WPR	YE	RW-WPR (C7-4)
6	MSW	OR	RW-MSW (C7-3)
7	CLD	VI	RW-CLD (C7-7)
8	MON	GY	RW-MON (C7-8)
9	RCK	WH	RW-RCK (C7-9)
10	RDT	GG	RW-RDI (C7-10)
11	+5V	GR	RW- –7 (C7-11)
12	GND	RE	RW- –12 (C7-12)

C2

Pin No.	Pin Name	Wire Color	Destination
1	MG	BE	DC- –12 (C2-3)
2	MG	–	–
3	M5V	GR	DC- –7 (C2-1)

DC

C1

Pin No.	Pin Name	Wire Color	Destination
1	–7	GR	SELL- –7 (C3-2)
2	Vss	–	–
3	–12	BE	SELL- –12 (C1-5)
4	–15	–	–
5	Vss	BL	SELL-Vss (C1-2)
6	+15	–	–

C2

Pin No.	Pin Name	Wire Color	Destination
1	–7	GR	CR-M5V (C2-3)
2	Vss	BL	MK4-Vss (C9-5)
3	–12	BE	CR-MG (C2-1)
4	–15	BR	EQ- –15 (C2-2)
5	E	BL	EQ-E (C2-5)
6	+15	OR	EQ-+15 (C2-3)

C3

Pin No.	Pin Name	Wire Color	Destination
1	–7	GR	STO- –7 (C1-2)
2	Vss	–	–
3	–12	BE	A- –12 (C10-1)
4	–15	BR	A- –15 (C10-2)
5	E	BL	A-E (C10-6)
6	+15	OR	A-+15 (C10-7)

C4

Pin No.	Pin Name	Wire Color	Destination
1	–7	GR	RW- –7 (C8-1)
2	Vss	BL	RW-Vss (C8-2)
3	–12	BE	RW- –12 (C8-3)
4	–15	–	–
5	E	–	–
6	+15	–	–

C5

Pin No.	Pin Name	Wire Color	Destination
1	–7	GR	SELR- –7 (C1-2)
2	Vss	BL	FM-Vss (C2-2)
3	–12	BE	FM- –12 (C2-3)
4	–15	BR	FM- –15 (C2-6)
5	E	BL	FM-E (C2-5)
6	+15	OR	FM-+15 (C2-4)

C6

Pin No.	Pin Name	Wire Color	Destination
1	–7	GR	KC- –7 (C7-1)
2	Vss	BL	KC-Vss (C7-2)
3	–12	BE	KC- –12 (C7-3)
4	–15	–	–
5	E	BL	KC-E (C7-5)
6	+15	OR	KC-+15 (C7-6)

C7

Pin No.	Pin Name	Wire Color	Destination
1	–12	BE	RW- –12 (C9-1)
2	–	–	–
3	PON	GR	RW-PON (C9-2)
4	–	–	–
5	–78	VI	RW- –78 (C9-3)

C8

Pin No.	Pin Name	Wire Color	Destination
1	–12	BE	88 UNIT ⊖
2	–	–	–
3	–78	VI	88 UNIT ⊕

BB UNIT

C1

Pin No.	Pin Name	Wire Color	Destination
1			
2	–12	BE	DC- –12 (C8-1)
3	–	–	–
4	–78	VI	DC- –78 (C8-3)

PGM UNIT

CN No.	CN Name	Destination
CN1	24P connector	(to RW-CN5)

LOCK SW

Pin No.	Pin Name	Wire Color	Destination
1	CENTER TERMINAL	WH	RW-PLK (C3-9)
2	LOCK TERMINAL	BE	RW- –12 (C1-10)
3		BE	STO- –12 (C1-5)

5

GS1 OVERALL CIRCUIT DIAGRAM

GS1 OVERALL CIRC

F | G | H | I | J | K | L

Two Phase (1.1MHz)

IC1 IC2 IC3 IC4 IC5 IC6 IC7 IC8 IC9

to optional circuit

FM1

Key Code Data

Key Data

Envelope Control Data

Initial Touch Data

Pitch Control Data

Tone Data

Tone Data

Buffer Tr7,8 D7,8

Buffer Tr5,6 D5,6

Buffer Tr3,4 D3,4

Buffer Tr1,2 D1,2

Carrier 1

Phase Generator PG IC13 (YM344)

IC14 – 31pin (16Y16)

Voice Register VRG IC1 (YM347)

Envelope Generator EG IC5 (YM3

Modulator 1

Phase Generator PG IC14 (YM344)

IC16 – 31pin (16Y16)

Voice Register VRG IC2 (YM347)

Envelope Generator EG IC6 (YM

Modulator 2

Phase Generator IC15

Voice Register IC3

Carrier 2

Phase Generator IC16

Voice Register IC4

Envelope Generato

Envelope Generato

Key Data

Tone Data

D2M

D2A

Initial Touch Generator

IG IC12 (YM32000)

Pitch Envelope Processor

CP IC11 (YM31200)

After Touch Generator

AG IC1 (YM33400)

Digital Analog Converter

DAC IC6 (μPC62400)

Details of Buffers Marked X

FM2

KEY DATA

AFTER TOUCH DATA

TONE DATA D3A CARRIER 3

KEY DATA

TOUCH DATA

TONE DATA D3M MODULATOR 3

TONE DATA D4M MODULATOR 4

TONE DATA D4A CARRIER 4

ACCUMULATO

ACCUMULAT

CN1 CN2 CN3 CN4

CN3-1 CN3-2 C1 C2

ΦA, ΦB

(Notes)

IC1,2 :HD7400 IC11 :YM31200
IC3,6,7 :HD7417 IC12 :YM32000
IC4 :TC4009 IC13 :YM31100
IC5 :HD7404 Tr1~3:2SC752
IC8,9 :SN75366 D1~8:1S2473
IC10 :HD74LS122 D9~11:10E-1
Tr4 :2SC458

) IC3 : HD7417

CNX UNIT

PGM LOCK (S2)

CNB

RW

SEL-R

TONE SELECTOR

SELECTOR

IC21 (SN74LS366)

IC22 (HD74LS240)

Central Processing Unit

CPU IC 24 (μPD8035)

Programmable 4bit Counter

IC35 (HD74LS161)

IC36 (HD74LS161)

IC34 (SN74LS273)

2K X8bit RAM

RAM IC30 (TC5516)

RAM IC29 (TC5516)

AGRAM 002652

M	N	O	P	Q	R

Accumulator *Accumulator* *Adder*

ACC IC21(YM31600) ACC IC22(YM31600) ADD IC23(YM32700)

Digital Analog Converter *Multiplexer*

DAC IC24 (μPC610D) MPX IC25 (TC4051)

R1 27K X11 (11/12) R2 10K X11 (11/12)

Sample Hold IC26

Details of Buffers Marked X

(Notes)

IC1~4	: YM347	IC24	: μPC610D
IC5~8	: YM321	IC25	: TC4051
IC9~12	: YM322	IC26	: TC4016
IC13~16	: YM344	Tr1,3,5,7	: 2SC1959
IC17,19	: YM345-1	Tr2,4,6,8,14	: 2SA1015
IC18,20	: YM345-2	Tr9~13,16	: 2SC458
IC21,22	: YM316	FET1,2	: 2SK105
IC23	: YM327	D	: 1S2473

erator (Carrier) IC IC17 (YM345-1)

velope Controller IC9 (YM322)

erator (Modulator) M IC18 (YM345-2)

velope Controller IC10 (YM322)

tor (Modulator 2) IC19

velope ontroller IC11

tor (Carrier 2) IC20

velope ntroller IC12

MPX SH & BUFFER AO (BE) (C3-4)

A

Buffer Amp AI1 (C8-5)

Mixing PreAmp

Analog Delay IC5

Bias adjust (Wave form)

Clock Generator IC2 (IG03290)

Symphonic Ensemble Control SEC.IC(YM633)

Ens. Speed Adjust

Buffer Amp AI2 (C8-1)

IC6 VR3 Tr2 IC3

IC7 VR4 Tr3 IC4

FET1 FET2 FET3 FET4 TR D1 D2 D3 D4 ENS

EO1 (C5-6) EO2 (C5-10)

AO (C3-4,5) E (C3-1~3)

TFT ENSEMBLE (S7) to IC1,3-R(15)

(Notes) IC2:BA634 Tr2:2SC509 D1:1S1555

Tremolo/Ensemble Gate Control

(Notes)

IC1	: YM63300
IC2~4	: IG03290
IC5~7	: MN3009
IC8~10	: NJM4558
Tr1~3	: 2SC458LG
Tr4,5	: 2SC458
FET1~4	: 2SK30A
D1~4	: 1S1555
ZD1	: WZ050

CNB

CNX UNIT PROGRAM CN1(24P)

(BR)	G	1	2	φA	(BR)
(RE)	G			φB	(RE)
(OR)	G			BUSY	(OR)
(YE)	READY			CMD0	(YE)
(GR)	CMD1	9	10	CMD2	(GR)
(BE)	G			COMR	(BE)
(VI)	G			CTRL0	(VI)
(GY)	CTRL1			EXT	(GY)
(WH)	D2A			D2M	(WH)
(GG)	D3A	19	20	D3M	(GG)
(SB)	D4A			D4M	(SB)
(PK)	G	23	24	G	(PK)

CN1 C9 C3 C10 C4

Bi-directional Bus Transceivers IC26(SN74LS245)

D4M D4A D1A D3M5 D1M D3A D2A D2M

IC4 IC8 IC9 IC13 IC2 IC19 IC18

LOAD1 (CN6-6) LOAD2 (CN6-12) φA (CN6-2) φB (CN6-4) D1A (CN6-7) (CN6-16) D4M

D1A (CN5-17) (CN5-24) D4M φA (CN5-2) φB (CN5-4) READY (CN5-7) BUSY (CN5-6)

CNX UNIT LINE OUT ON OFF LIN (BR) (C8-1) (C1-1) (C7-1) EP CNB

DC-B General Export (240V)

GS1 OVERALL CIRCUIT DIAGRAM

R S T U V W

1 2 3 4 5 6 7 8

CNX UNIT
FOOT CONTROL
(YE) LIN (YE) (C1-1)
(RE) EXP (RE) (C1-2)
(BL) E (C2-1)
A
Tr12 Tr13
LAMP (YE) (C3-2)
(Notes) Tr12: 2SA1015 Tr13: 2SC509
CNB (C7-2) (C8-2) (RE) (BE)

EFF
TREMOLO SPEED (VR3) C100K
TREMOLO DEPTH (VR2) A10K
560
TSI (C2-4) TSO (C2-3) TDI (C1-2) TDO (C1-1)
A
TRMSO (C6-5) TRMSI (C6-2) TRMDO (C6-1)
IC12 2/2 IC12 1/2 VR5 820K 47K 27K 4.7/16 8P
(Note) IC12: NJM4558

TET
TREMOLO (S1)
to IC2,3-R(5)
D1 0.01 100K 33K IC1 VSS VDD 12K Tr1
TRM (BE) (C1-5)
(Notes) IC1: BA634 Tr1: 2SC509 D1: 1S1555

PEDAL UNIT
TREMOLO
TREM (GY) (CN1-9) B T (BL) (CN1-11) E
CNP UNIT
TREM (GY) (CN1-9) (CN1-11) E (BL)
(C3-2) (C3-4) (C5-2) (C5-4,5) (C6-7)
CNB

EQ
VOLUME (VR4) A50K
EQI1 (OR) (C1-2)
560P 6.8K IC1 2/2 10/16 6.8K 3.3/25 220 BP 100K 47/16
2.2K 100P IC3 1/2 4.7K EQO1 (RE) (C2-2)
BASS (VR1) 650K 1/50 150 IC2 2/2 22/16 BP 270
MID (VR2) 650K 0.1 180 IC4 2/2 10/25 BP 270
TREBLE (VR3) 650K 0.047 1.5K
+15 (C2-4) E (C2-2) -15 (C2-3)
EQI2 (C1-1)
IC1 1/2 (VR1) (VR2) (VR3) IC3 2/2 IC2 1/2 IC4 1/2 (VR4)
EQO2 (BR) (C2-5)
(Note) IC1~4: NJM4558

A
TRMD1 (C6-8) TRMSW (C6-7) TRMPD (C6-6) EXP (C4-1)
D9 D10 22K 4.7K -12 +15
Gain adjust VR6 100K B50K 680
VCA IC19 10/25 180K 22/16 IC13 1/2 Tr11 100
Gain rank of IC19: K 68K, L 56K, M 27K, R
Modulation adjust VR7 B50K 27K
PC1 PC2
TRMI1 (C4-7) TRMI2 (C4-5) 22/16 BP
47P 22K 1.5K 120P IC17 2/2 IC17 1/2 1K
VR8 B2K 68K 2.2K TR1 TR2
(Notes)
IC13,17: NJM4558
IC19 : IG02600
Tr11,14: 2SA509
D9,10 : 1S1555
PC1,2 : P873-13

+15' +15' 100 47/16 -15'
Sample Hold
FET2 Tr15 10/16 1K 10K 4.7K 100K 0.0056 -15'
AO (GR) (C3-4,5)
E (C3-1~3)

FET1 FET2 FET3 FET4 TR D1 D2 D3 D4 ENS
1K 3.3/16 BP 47K 100K EO1 (OR) (C5-6) EO2 (YE) (C5-10)
Tr4 100K 1M 0.1 +15 +7.5 -7.5

Phase Amp
47P 270K 22M 47 HPO1 (C3-3) HPO2 (C3-4) E (C3-7)
100K 120P IC16 2/2 Tr20 Tr21 820 100 IC16 1/2 +VCC -VEE 270P 470 MIX (C2-5) E (C2-1,2)
IC14 IC15 1/2 470 OUT1 (C2-7) OUT2 (C2-6) E (C2-5) E (C2-3)
Tr18 Tr19 Tr22 Tr23 D12 D14 IC T1 T2 BAL1B BAL1A BAL2B BAL2A
VCC -VEE +VCC
Initial Clear
Tr15 Tr16 Tr17 120K 5.6K 47 33K 220/16 15K 10/16 22K D11
to KC-IC (C1-3) CNB-IC (C6-5) (Initial Clear)
(Notes)
IC14 : TC4016
IC15,16 : NJM4558
Tr 22,23 : 2SC458LG
Tr15,18,19 : 2SC458
Tr 6,16,20 : 2SC509
Tr 7,17,21 : 2SA509
Tr 20 : 2SC1212A
Tr 21 : 2SA743A
D11~16 : 1S1555

CNX UNIT
HPO1 (C2-3) HPO2 (C2-4) E (C2-5)
PHONES (J1)
CNP UNIT
PEDAL UNIT
MIX (CN1-5) (CN1-17) MIX OUT (J1)
OUT1 (CN1-7) (CN1-19) OUT 1 (J2)
OUT2 (CN1-6) (CN1-18) OUT 2 (J3)
BAL1B (CN1-4) BAL1A (CN1-3) (CN1-15) BAL 1 (CN4)
BAL2B (CN1-2) BAL2A (CN1-1) (CN1-13) BAL 2 (CN2)

CNX UNIT
LINE OUT
ON OFF
LIN (BR) (C1-1) (C8-1) (VI) (C7-1)
CNB
EP

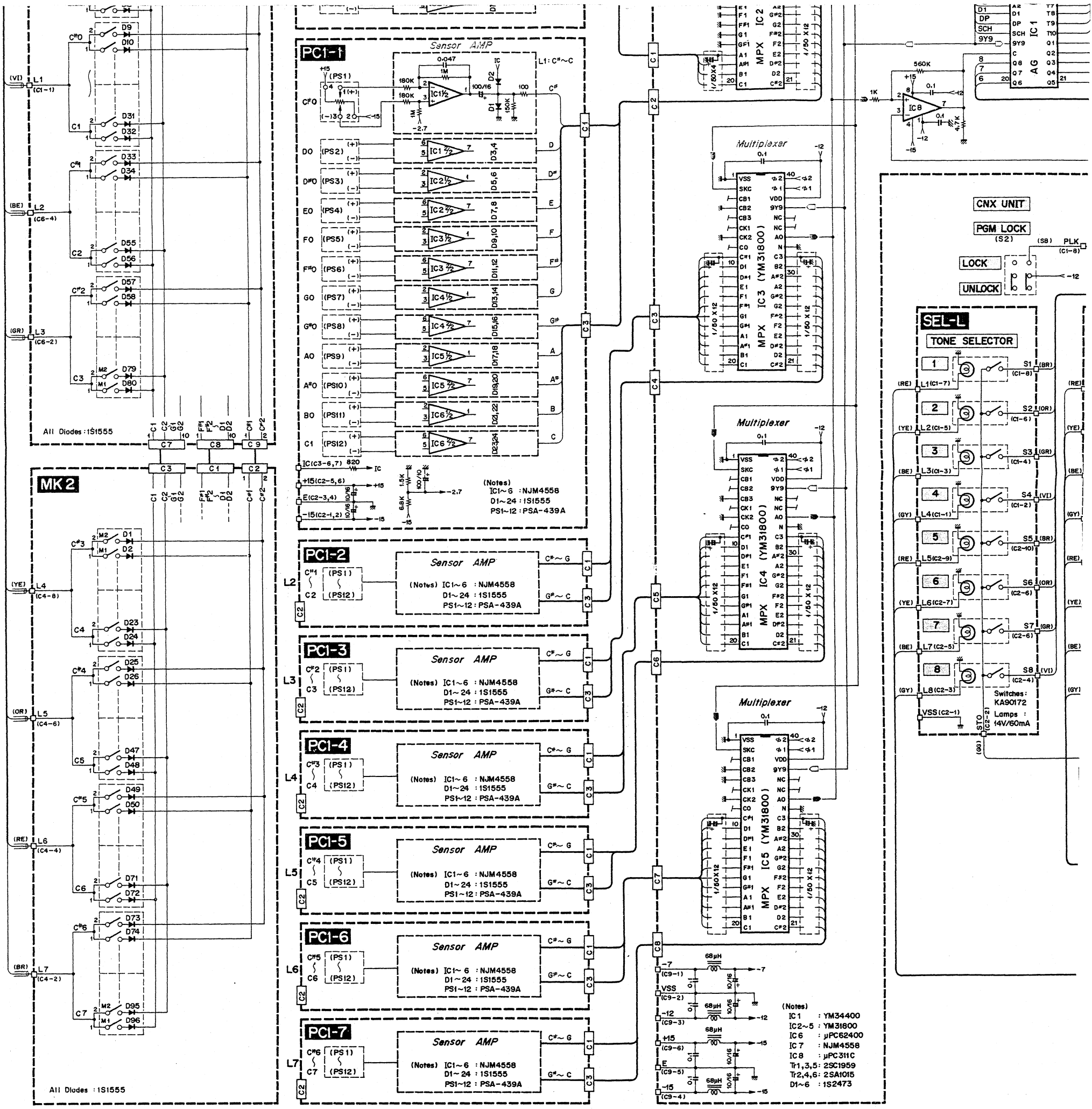

KC

C1

Pin No.	Pin Name	Wire Color	Destination
1	Vss	BL	DET-Vss (C1-3)
2	V1B	RE	A-PCO (C7-2)
3	IC	OR	A-IC (C5-2)
4			
5			

C2

Pin No.	Pin Name	Wire Color	Destination
1	φ2	–	–
2	16Y16	–	–
3	SCH	–	–
4	KCO	–	–
5	KCI	–	–
6	–12	–	–

C3

Pin No.	Pin Name	Wire Color	Destination
1	PS1	–	–
2	PS2	RE	TET-TRS (C1-3)
3	DP1	OR	DET-SD1 (C1-2)
4	DP2	–	–
5	DP3	GR	DET-SD2 (C1-1)
6	RP1	BE	DET-RD1 (C1-4)
7	RP2	VI	DET-RD2 (C1-5)
8	RP3	–	–
9	DAMP	WH	CNB-DAMP (C6-6)
10			

C6

Pin No.	Pin Name	Wire Color	Destination
1	G2	S BR	MK1-G2 (C4-12)
2	G1	S RE	MK1-G1 (C4-9)
3	G# 2	S OR	MK1-G # 2 (C4-8)
4	G# 1	S YE	MK1-G # 1 (C4-5)
5	A2	S GR	MK1-A2 (C4-4)
6	A1	S BE	MK1-A1 (C4-1)
7	A # 2	S VI	MK1-A # 2 (C5-12)
8	A # 1	S GY	MK1-A # 1 (C5-9)
9	B2	S WH	MK1-B2 (C5-8)
10	B1	S GG	MK1-B1 (C5-5)
11	C2	S SB	MK1-C2 (C5-4)
12	C4	S PK	MK1-C1 (C5-1)

C7

Pin No.	Pin Name	Wire Color	Destination
1	–7	GR	DC- –7 (C7-1)
2	Vss	BL	DC-Vss (C7-2)
3	–12	BE	DC- –12 (C7-3)
4	–	–	–
5	E	BL	DC-E (C7-5)
6	+15	OR	DC-+15 (C7-6)

C8

Pin No.	Pin Name	Wire Color	Destination
1	–	–	–
2	E10	YE	FM1-E10 (C1-4)
3	E9	OR	FM1-E9 (C1-3)
4	E8	RE	FM1-E8 (C1-2)
5	E7	BR	FM1-E7 (C1-1)

FM1

C1

Pin No.	Pin Name	Wire Color	Destination
1	E7	BR	KC-E7 (C8-5)
2	E8	RE	KC-E8 (C8-4)
3	E9	OR	KC-E9 (C8-3)
4	E10	YE	KC-E10 (C8-2)
5			

C2

Pin No.	Pin Name	Wire Color	Destination
1	–	–	–
2	Vss	BL	DC-Vss (C6-2)
3	–12	BE	DC- –12 (C6-3)
4	+15	OR	DC-+15 (C6-6)
5	E	BL	DC-E (C6-5)
6	–15	BR	DC- –15 (C6-4)

C3

Pin No.	Pin Name	Wire Color	Destination
1	E	–	–
2	E	–	–
3	E	S GR S	A-E (C8-4)
4	AO	S GR	A-AI1 (C8-5)
5	AO	–	–

MPX

C1

Pin No.	Pin Name	Wire Color	Destination
1	C1	BR	PCB-C (C1-4)
2	BO	PK	PCB-B (C1-3)
3	A # O	SB	PCB-A# (C1-2)
4	AO	GG	PCB-A (C1-1)
5	–	–	–

C2

Pin No.	Pin Name	Wire Color	Destination
1	C2	BR	PCA1-C (C3-5)
2	B1	PK	PCA1-B (C3-4)
3	A # 1	SB	PCA1-A # (C3-3)
4	A1	GG	PCA1-A (C3-2)
5	G # 1	WH	PCA1-G # (C3-1)
6	G1	GY	PCA1-G (C1-7)
7	F # 1	VI	PCA1-F # (C1-6)
8	F1	BE	PCA1-F (C1-5)
9	E1	GR	PCA1-E (C1-4)
10	D # 1	YE	PCA1-D # (C1-3)
11	D1	OR	PCA1-D (C1-2)
12	C # 1	RE	PCA1-C # (C1-1)

C3

Pin No.	Pin Name	Wire Color	Destination
1	C3	BR	PCA2-C (C3-5)
2	B2	PK	PCA2-B (C3-4)
3	A # 2	SB	PCA2-A # (C3-3)
4	A2	GG	PCA2-A (C3-2)
5	G # 2	WH	PCA2-G # (C3-1)
6	G2	GY	PCA2-G (C1-7)
7	F # 2	VI	PCA2-F # (C1-6)
8	F2	BE	PCA2-F (C1-5)

C6

Pin No.	Pin Name	Wire Color	Destination
1	C6	BR	PCA5-C (C3-5)
2	B5	PK	PCA5-B (C3-4)
3	A # 5	SB	PCA5-A # (C3-3)
4	A5	GG	PCA5-A (C3-2)
5	G # 5	WH	PCA5-G # (C3-1)
6	G5	GY	PCA5-G (C1-7)
7	F # 5	VI	PCA5-F # (C1-6)
8	F5	BE	PCA5-F (C1-5)
9	E5	GR	PCA5-E (C1-4)
10	D # 5	YE	PCA5-D # (C1-3)
11	D5	OR	PCA5-D (C1-2)
12	C # 5	RE	PCA5-C # (C1-1)

C7

Pin No.	Pin Name	Wire Color	Destination
1	C7	BR	PCA6-C (C3-5)
2	B6	PK	PCA6-B (C3-4)
3	A # 6	SB	PCA6-A # (C3-3)
4	A6	GG	PCA6-A (C3-2)
5	G # 6	WH	PCA6-G # (C3-1)
6	G6	GY	PCA6-G (C1-7)
7	F # 6	VI	PCA6-F # (C1-6)
8	F6	BE	PCA6-F (C1-5)
9	E6	GR	PCA6-E (C1-4)
10	D # 6	YE	PCA6-D # (C1-3)
11	D6	OR	PCA6-D (C1-2)
12	C # 6	RE	PCA6-C # (C1-1)

C8

Pin No.	Pin Name	Wire Color	Destination
1	C8	BR	PCA7-C (C3-5)

C1

Pin No.	Pin Name	Wire Color	Destination
1	S1	BR	SELL-S1 (C1-8)
2	L1	RE	SELL-L1 (C1-7)
3	S2	OR	SELL-S2 (C1-6)
4	L2	YE	SELL-L2 (C1-5)
5	S3	GR	SELL-S3 (C1-4)
6	L3	BE	SELL-L3 (C1-3)
7	S4	VI	SELL-S4 (C1-2)
8	L4	GY	SELL-L4 (C1-1)
9	WRITE	WH	CNB-WRITE (C7-6)
10	–12	BE	CNB- –12 (C7-7)

C2

Pin No.	Pin Name	Wire Color	Destination
1	S5	BR	SELL-S5 (C2-10)
2	L5	RE	SELL-L5 (C2-9)
3	S6	OR	SELL-S6 (C2-8)
4	L6	YE	SELL-L6 (C2-7)
5	S7	GR	SELL-S7 (C2-6)
6	L7	BE	SELL-L7 (C2-5)
7	S8	VI	SELL-S8 (C2-4)
8	L8	GY	SELL-L8 (C2-3)
9	STO	GG	SELL-STO (C2-2)
10	Vss	BL	SELL-Vss (C2-1)

C3

Pin No.	Pin Name	Wire Color	Destination
1	S1	BR	SELR-S1 (C1-8)
2	L9	RE	SELR-L9 (C1-7)
3	S2	OR	SELR-S2 (C1-6)
4	L10	YE	SELR-L10 (C1-5)
5	S3	GR	SELR-S3 (C1-4)

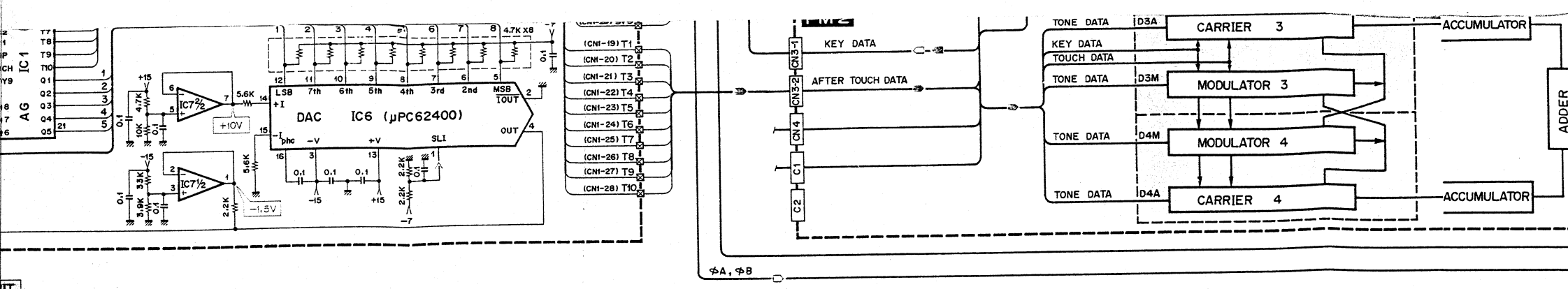

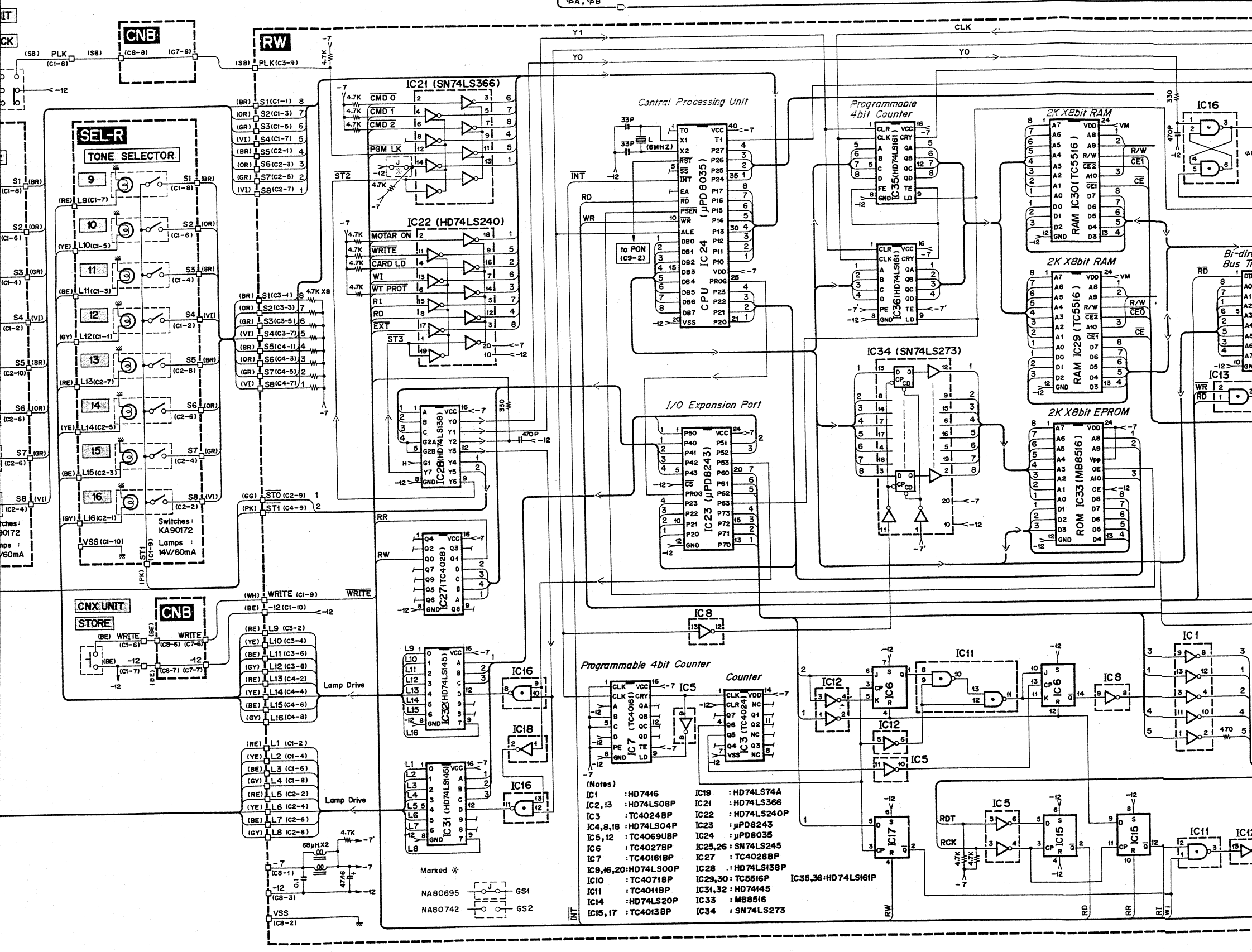

RW

C1

	Destination
	SELL-S1 (C1-8)
	SELL-L1 (C1-7)
	SELL-S2 (C1-6)
	SELL-L2 (C1-5)
	SELL-S3 (C1-4)
	SELL-L3 (C1-3)
	SELL-S4 (C1-2)
	SELL-L4 (C1-1)
	CNB-WRITE (C7-6)
	CNB- −12 (C7-7)

C2

	Destination
	SELL-S5 (C2-10)
	SELL-L5 (C2-9)
	SELL-S6 (C2-8)
	SELL-L6 (C2-7)
	SELL-S7 (C2-6)
	SELL-L7 (C2-5)
	SELL-S8 (C2-4)
	SELL-L8 (C2-3)
	SELL-STO (C2-2)
	SELL-Vss (C2-1)

C3

	Destination
	SELR-S1 (C1-8)
	SELR-L9 (C1-7)
	SELR-SZ (C1-6)
	SELR-L10 (C1-5)
	SELR-S3 (C1-4)

C8

Pin No.	Pin Name	Wire Color	Destination
1	−7	GR	DC- −7 (C3-1)
2	Vss	BL	DC-Vss (C3-2)
3	−12	BE	DC- −12 (C3-3)
4			
5			
6			

C9

Pin No.	Pin Name	Wire Color	Destination
1	−12	BE	DC- −12 (C11-1)
2	PON	PK	DC-PON (C11-2)
3	−7B	VI	DC- −7B (C11-3)

MK1

C1

Pin No.	Pin Name	Wire Color	Destination
1	L1	S VI	KC-L1 (C4-7)
2	Vss	S VI S	
3	Vss	S GY S	
4	LO	S GY	KC-LO (C4-8)

C6

Pin No.	Pin Name	Wire Color	Destination
1	Vss	–	–
2	L3	S GR	KC-L3 (C4-5)
3	Vss	S GR S	
4	L2	S BE	KC-L2 (C4-6)
5	Vss	S BE S	

C2

Pin No.	Pin Name	Wire Color	Destination
1	D # 1	S BE	KC-D # 1 (C5-6)
2	Vss	S BE S	
3	Vss	S GR S	
4	D # 2	S GR	KC-D # 2 (C5-5)
5	D1	SYE	KC-D1 (C5-4)
6	Vss	S YE S	
7	Vss	S OR S	
8	D2	S OR	KC-D2 (C5-3)
9	C # 1	S RE	KC-C # 1 (C5-2)
10	Vss	S RE S	
11	Vss	SBR S	
12	C # 2	S BR	KC-C # 2 (C5-1)

C7

Pin No.	Pin Name	Wire Color	Destination
1	C1	BR	MK2-C1 (C3-1)
2	C2	RE	MK2-C2 (C3-2)
3	B1	OR	MK2-B1 (C3-3)
4	B2	YE	MK2-B2 (C3-4)
5	A # 1	GR	MK2-A # 1 (C3-5)
6	A # 2	BE	MK2-A # 2 (C3-6)
7	A1	VI	MK2-A1 (C3-7)
8	A2	GY	MK2-A2 (C3-8)
9	G # 1	WH	MK2-G # 1 (C3-9)
10	G # 2	GG	MK2-G # 2 (C3-10)
11	G1	SB	MK2-G1 (C3-11)
12	G2	PK	MK2-G2 (C3-12)

C3

Pin No.	Pin Name	Wire Color	Destination
1	F # 1	S PK	KC-F # 1 (C5-12)
2	Vss	S PK S	
3	Vss	S SB S	
4	F # 2	S SB	KC-F # 2 (C5-11)
5	F1	S GG	KC-F1 (C5-10)
6	Vss	S GG S	
7	Vss	S WH S	
8	F2	S WH	KC-F2 (C5-9)
9	F1	S GY	KC-F1 (C5-8)

C8

Pin No.	Pin Name	Wire Color	Destination
1	F # 1	BR	MK2-F # 1 (C1-1)
2	F # 2	RE	MK2-F # 2 (C1-2)
3	F1	OR	MK2-F1 (C1-3)
4	F2	YE	MK2-F2 (C1-4)
5	E1	GR	MK2-E1 (C1-5)
6	E2	BE	MK2-E2 (C1-6)
7	D # 1	VI	MK2-D # 1 (C1-7)
8	D # 2	GY	MK2-D # 2 (C1-8)
9	D1	WH	MK2-D1 (C1-9)

MK2

C1

Pin No.	Pin Name	Wire Color	Destination
1	F # 1	BR	MK1-F # 1 (C8-1)
2	F # 2	RE	MK1-F # 2 (C8-2)
3	F1	OR	MK1-F1 (C8-3)
4	F2	YE	MK1-F2 (C8-4)
5	E1	GR	MK1-E1 (C8-5)
6	E2	BE	MK1-E2 (C8-6)
7	D # 1	VI	MK1-D # 1 (C8-7)
8	D # 2	GY	MK1-D # 2 (C8-8)
9	D1	WH	MK1-D1 (C8-9)
10	D2	GG	MK1-D2 (C8-10)

C2

Pin No.	Pin Name	Wire Color	Destination
1	C # 1	SB	MK1-C # 1 (C9-1)
2	C # 2	PK	MK1-C # 2 (C9-2)
3	Vss	BL	MK1-Vss (C9-3)
4	Vss	BL	MK1-Vss (C9-4)
5	Vss	–	–

C3

Pin No.	Pin Name	Wire Color	Destination
1	C1	BR	MK1-C1 (C7-1)
2	C2	RE	MK1-C2 (C7-2)
3	B1	OR	MK1-B1 (C7-3)
4	B2	YE	MK1-B2 (C7-4)
5	A # 1	GR	MK1-A # 1 (C7-5)
6	A # 2	BE	MK1-A # 2 (C7-6)
7	A1	VI	MK1-A1 (C7-7)
8	A2	GY	MK1-A2 (C7-8)
9	G # 1	WH	MK1-G # 1 (C7-9)
10	G # 2	GG	MK1-G # 2 (C7-10)
11	G1	SB	MK1-G1 (C7-11)

PCA1

C1

Pin No.	Pin Name	Wire Color	Destination
1	C #	RE	MPX-G1 (C2-12)
2	D	OR	MPX-D1 (C2-11)
3	D #	YE	MPX-D # 1 (C2-10)
4	E	GR	MPX-E1 (C2-9)
5	F	BE	MPX-F1 (C2-8)
6	F #	VI	MPX-F # 1 (C2-7)
7	G	GY	MPX-G1 (C2-6)

C2

Pin No.	Pin Name	Wire Color	Destination
1	−15	BR	CNB- −15 (C4-3)
2	−15	BR	PCA2- −15 (C2-1)
3	E	BL	CNB-E (C4-5)
4	E	BL	PCA2-E (C2-3)
5	+15	RE	CNB-15S (C4-7)
6	+15	RE	PCA2-+15 (C2-5)
7	–	–	–

C3

Pin No.	Pin Name	Wire Color	Destination
1	G #	WH	MPX-G # 1 (C2-5)
2	A	GG	MPX-A1 (C2-4)
3	A #	SB	MPX-A # 1 (C2-3)
4	B	PK	MPX-B1 (C2-2)
5	C	BR	MPX-C2 (C2-1)
6	IC	GY	CNB-IC (C4-1)
7	IC	GY	PCA2-IC (C3-6)

PCA3

C1

Pin No.	Pin Name	Wire Color	Destination
1	C #	RE	MPX-C # 3 (C4-12)
2	D	OR	MPX-D (C4-11)
3	D #	YE	MPX-D # 3 (C4-10)
4	E	GR	MPX-E (C4-9)
5	F	BE	MPX-F (C4-8)
6	F #	VI	MPX-F # 3 (C4-7)
7	G	GY	MPX-G (C4-6)

C2

Pin No.	Pin Name	Wire Color	Destination
1	−15	BR	PCA2- -15 (C2-2)
2	−15	BR	PCA4- -15 (C2-1)
3	E	BL	PCA2-E (C2-4)
4	E	BL	PCA4-E (C2-3)
5	+15	OR	PCA2-+5 (C2-6)
6	+15	OR	PCA4-+5 (C2-5)
7	–	–	

C3

Pin No.	Pin Name	Wire Color	Destination
1	G #	WH	MPX-G # 3 (C4-5)
2	A	GG	MPX-A3 (C4-4)
3	A #	SB	MPX-A # 3 (C4-3)
4	B	PK	MPX-B3 (C4-2)
5	C	BR	MPX-C4 (C4-1)
6	IC	GY	PCA2-IC (C3-7)
7	IC	GY	PCA4-IC (C3-6)

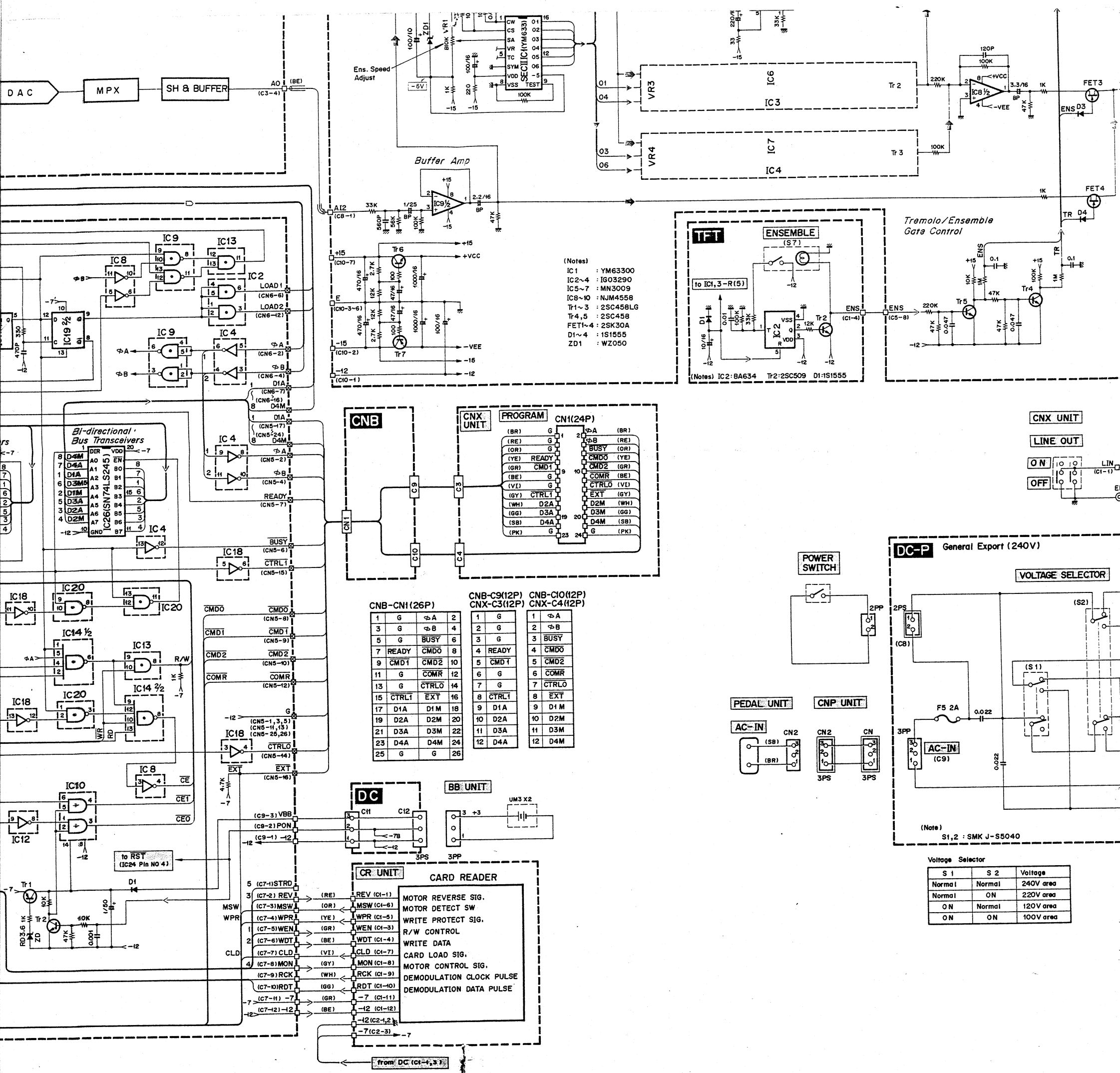

PCA5

C1

Pin Name	Wire Color	Destination
C #	RE	MPX-C # 5 (C6-12)
D	OR	MPX-D5 (C6-11)
D #	YE	MPX-D # 5 (C6-10)
E	GR	MPX-E5 (C6-9)
F	BE	MPX-F5 (C6-8)
F #	VI	MPX-F # 5 (C6-7)
G	GY	MPX-G5 (C6-6)

C2

Pin Name	Wire Color	Destination
-15	BR	PCA4- -15 (C2-2)
-15	BR	PCA6- -15 (C2-1)
E	BL	PCA4-E (C2-4)
E	BL	PCA6-E (C2-3)
+15	OR	PCA4-+15 (C2-6)
+15	OR	PCA6-+15 (C2-5)

C3

Pin Name	Wire Color	Destination
G #	WH	MPX-G # 5 (C6-5)
A	GG	MPX-A5 (C6-4)
A #	SB	MPX-A # 5 (C6-3)
B	PK	MPX-B5 (C6-2)
C	BR	MPX-C6 (C6-1)
IC	GY	PCA4-IC (C3-7)
IC	GY	PCA6-IC (C3-6)

PCA7

C1

Pin No.	Pin Name	Wire Color	Destination
1	C #	RE	MPX-C # 7 (C8-12)
2	D	OR	MPX-D7 (C8-11)
3	D #	YE	MPX-D # 7 (C8-10)
4	E	GR	MPX-E7 (C8-9)
5	F	BE	MPX-F7 (C8-8)
6	F #	VI	MPX-F # 7 (C8-7)
7	G	GY	MPX-G7 (C8-6)

C2

Pin No.	Pin Name	Wire Color	Destination
1	-15	BR	PCA6- -15 (C2-2)
2	-15	–	–
3	E	BL	PCA6-E (C2-4)
4	E	–	–
5	+15	OR	PCA6-+15 (C2-6)
6	+15	–	–
7	–	–	–

C3

Pin No.	Pin Name	Wire Color	Destination
1	G #	WH	MPX-G # 7 (C8-5)
2	A	GG	MPX-A7 (C8-4)
3	A #	SB	MPX-A # 7 (C8-3)
4	B	PK	MPX-B7 (C8-2)
5	C	BR	MPX-C8 (C8-1)
6	IC	GY	PCA6-IC (C3-7)
7	IC	–	–

A

C1

Pin No.	Pin Name	Wire Color	Destination
1	E	S BE S	
2	E	S VI S	
3	E	S GY S	
4	BAL2A	S BE	CNP-BAL2A (C1-4)
5	BAL2B	S VI	CNP-BAL2B (C1-5)
6	E	S WH S	
7	BAL1A	S GY	CNP-BAL1A (C1-7)
8	BAL1B	S WH	CNP-BAL1B (C1-8)

C2

Pin No.	Pin Name	Wire Color	Destination
1	E	–	–
2	E	S OR S	–
3	E	S YE S	–
4	MIX	S OR	CNP-MIX (C2-4)
5	E	S GR S	–
6	OUT2	S YE	CNP-OUT2 (C2-6)
7	OUT1	S GR	CNP-OUT1 (C2-7)

C3

Pin No.	Pin Name	Wire Color	Destination
1	–	–	–
2	–	–	–
3	E	BL	CNX-E (C2-1)
4	LAMP	YE	CNX-LAMP (C2-2)
5	HPO1	BR	CNX-HPO1 (C2-3)
6	HPO2	RE	CNX-HPO2 (C2-4)
7	E	BL	CNX-E (C2-5)

C4

C7

Pin No.	Pin Name	Wire Color	Destination
1	PC3	GR	CNB-PC3 (C7-5)
2	PC0	RE	KC-VIB (C1-2)
3	PC2	OR	CNB-PC2 (C7-4)
4	PC1	YE	CNB-PC1 (C7-3)
5	E	BL	EFF-E (C1-4)

C8

Pin No.	Pin Name	Wire Color	Destination
1	AI2	S BE	FM2-AO (C3-4)
2	E	S BE S	FM2-E (C3-3)
3	E	–	–
4	E	S GR S	FM1-E (C3-3)
5	AI1	S GR	FM1-AO (C3-4)

C9

Pin No.	Pin Name	Wire Color	Destination
1	V1BSP	VI	EFF-VSI (C1-3)
2	V1BPD	GG	CNB-V1B (C6-8)
3	–	–	–
4	V1BDI	GR	EFF-VDO (C1-1)
5	E	–	–
6	–	–	–
7	V1BDO	BE	EFF-VDI (C1-2)

C10

Pin No.	Pin Name	Wire Color	Destination
1	-12	BE	CNB- -12 (C2-1)
2	-15	BR	CNB- -15 (C2-3)
3	E	–	–

EFF

C1

Pin No.	Pin Name	Wire Color	Destination
1	VDD	GR	A-V1BDI (C9-4)
2	VDI	BE	A-V1BDO (C9-7)
3	VSI	VI	A-V1BSP (C9-1)
4	E	BL	A-E (C7-5)
5	E	–	–

C2

Pin No.	Pin Name	Wire Color	Destination
1	TDO	BR	A-TRMDI (C6-8)
2	TDI	RE	A-TRMDO (C6-1)
3	TSO	OR	A-TRMDI (C6-2)
4	TSI	YE	A-TRMSO (C6-5)
5	–	–	–

TET

C1

Pin No.	Pin Name	Wire Color	Destination
1	Vss	BL	CNB-Vss (C6-3)
2	-12	BE	CNB- -12 (C6-1)
3	TRS	RE	KC-PS2 (C3-2)
4	ENS	GR	A-ENSS (C5-8)
5	TRM	BE	A-TRMSW (C6-6)

SELR

C1

Pin No.	Pin Name	Wire Color	Destination
1	L12	GY	RW-L12 (C3-8)
2	S4	VI	RW-S4 (C3-7)
3	L11	BE	RW-L11 (C3-6)
4	S3	GR	RW-S3 (C3-5)
5	L10	YE	RW-L10 (C3-4)
6	S2	OR	RW-S2 (C3-3)
7	L9	RE	RW-L9 (C3-2)
8	S1	BR	RW-S1 (C3-1)
9	ST1	PK	RW-ST1 (C4-9)
10	Vss	BL	RW-Vss (C4-10)

C2

Pin No.	Pin Name	Wire Color	Destination
1	L16	GY	RW-L16 (C4-8)
2	S8	VI	RW-S8 (C4-7)
3	L15	BE	RW-L15 (C4-6)
4	S7	GR	RW-S7 (C4-5)
5	L14	YE	RW-L14 (C4-4)
6	S6	OR	RW-S6 (C4-3)
7	L13	RE	RW-L13 (C4-2)
8	S5	BR	RW-S5 (C4-1)

EQ

C1

CR

C1

Pin No.	Pin Name	Wire Color	Dest
1	REV	RE	RW-RE
2	–	–	
3	WEN	GR	RW-WE
4	WDT	BE	RW-WD
5	WPR	YE	RW-WP
6	MSW	OR	RW-MS
7	CLD	VI	RW-CL
8	MON	GY	RW-MO
9	RCK	WH	RW-RC
10	RDT	GG	RW-RD
11	+5V	GR	RW- -7
12	GND	BE	RW- -1

C2

Pin No.	Pin Name	Wire Color	Des
1	MG	BE	DC- -1
2	MG	–	
3	M5V	GR	DC- -7

CN

C1

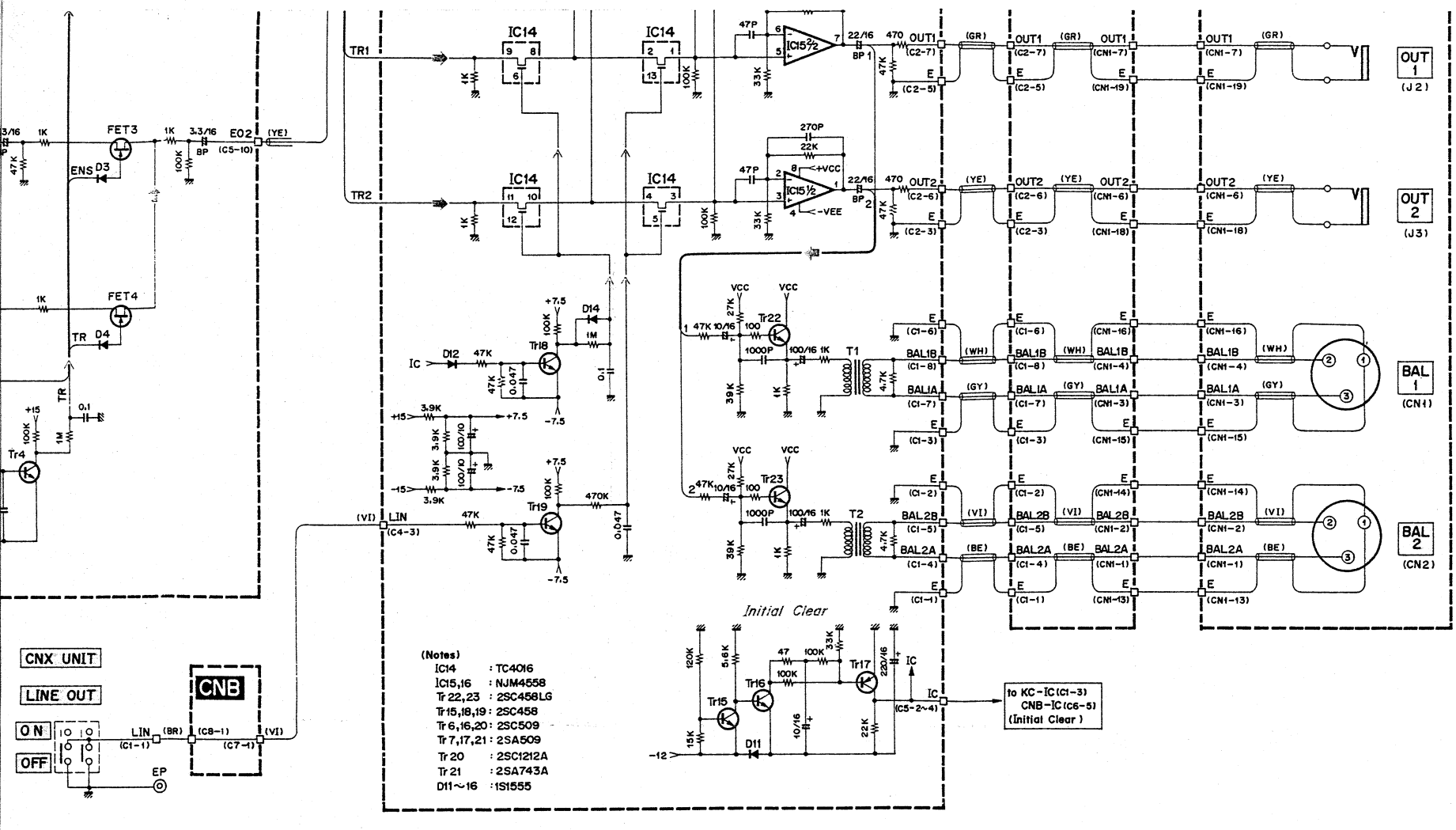

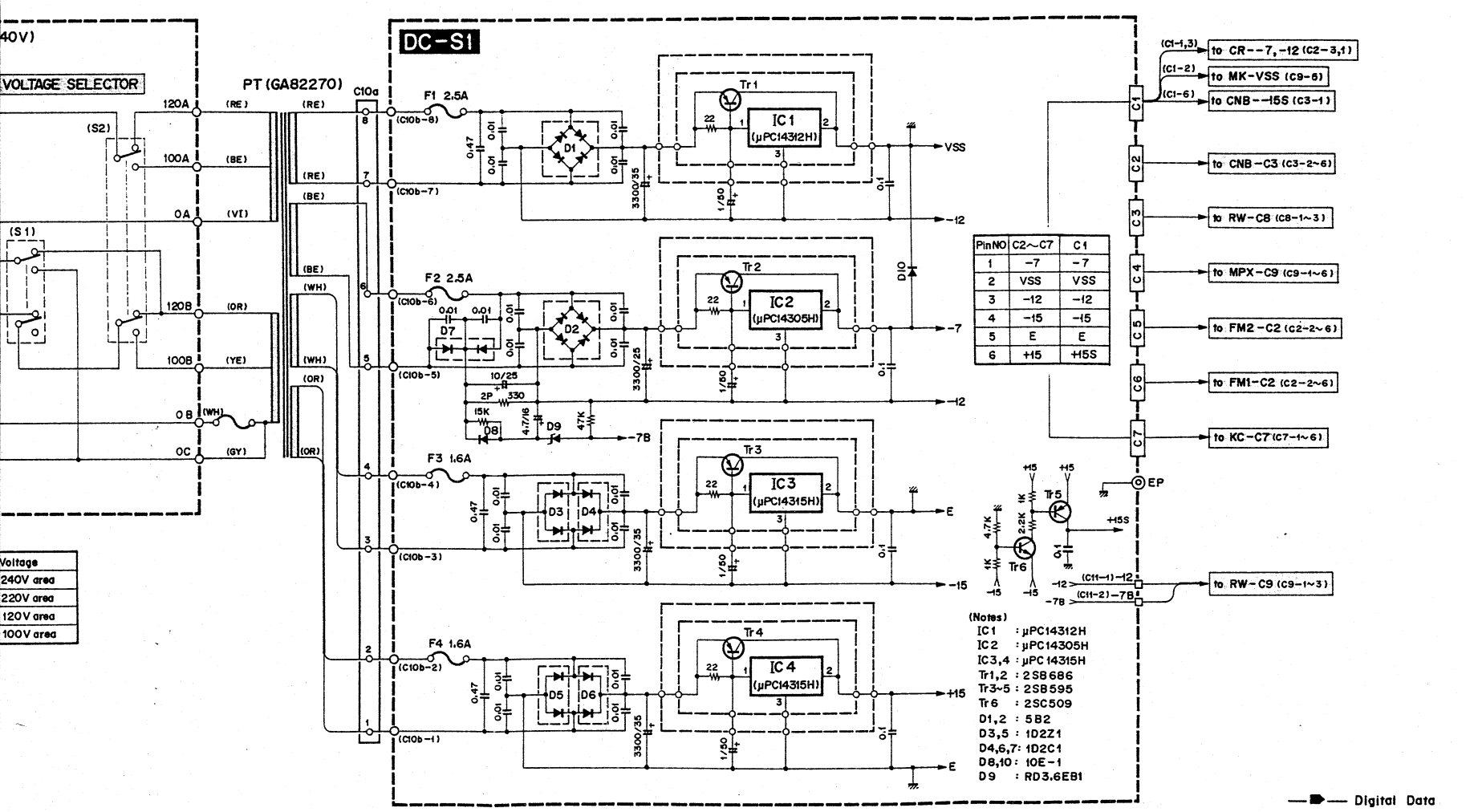

CR

C1

Pin No.	Pin Name	Wire Color	Destination
1	REV	RE	RW-REV (C7-2)
2	–	–	–
3	WEN	GR	RW-WEN (C7-5)
4	WDT	BE	RW-WDT (C7-6)
5	WPR	YE	RW-WPR (C7-4)
6	MSW	OR	RW-MSW (C7-3)
7	CLD	VI	RW-CLD (C7-7)
8	MON	GY	RW-MON (C7-8)
9	RCK	WH	RW-RCK (C7-9)
10	RDT	GG	RW-RDK (C7-10)
11	+5V	GR	RW-–7 (C7-11)
12	GND	BE	RW-–12 (C7-12)

C2

Pin No.	Pin Name	Wire Color	Destination
1	MG	BE	DC-–12 (C1-3)
2	MG	–	–
3	M5V	GR	DC-–7 (C1-1)

CN

C1

Pin No.	Pin Name	Wire Color	Destination
1	–	–	–

CNB

C4

Pin No.	Pin Name	Wire Color	Destination
1	IC	GY	PCA-IC (C3-6)
2	–15	–	–
3	–15	BR	PCA-–15 (C2-1)
4	E	–	–
5	E	BL	PCA-E (C2-3)
6	15S	–	–
7	15S	RE	PCA-+15 (C2-5)

C5

Pin No.	Pin Name	Wire Color	Destination
1	DAMP	WH	CNP-DAMP (C3-1)
2	TRM	GY	CNP-TREM (C3-2)
3	V1B	GG	CNP-V1B (C3-3)
4	E	BL	CNP-E (C3-4)
5	E	BL	CNP-E (C3-5)

C6

Pin No.	Pin Name	Wire Color	Destination
1	–12	BE	TET-–12 (C1-2)
2	–12	–	–
3	Vss	BL	TET-Vss (C1-1)
4	Vss	–	–
5	IC	GY	A-IC (C5-3)
6	DAMP	WH	KC-DAMP (C3-9)
7	TRM	GR	A-TRMPD (C6-7)
8	V1B	GG	A-V1B (C9-2)

C7

Pin No.	Pin Name	Wire Color	Destination
1			

C9

Pin No.	Pin Name	Wire Color	Destination
1	G	BR	CNX-G (C3-1)
2	G	RE	CNX-G (C3-2)
3	G	OR	CNX-G (C3-3)
4	READY	YE	CNS-READY (C3-4)
5	$\overline{CMD1}$	GR	CNX-$\overline{CMD1}$ (C3-5)
6	G	BE	CNX-G (C3-6)
7	G	VI	CNX-G (C3-7)
8	$\overline{CTRL1}$	GY	CNX-$\overline{CTRL1}$ (C3-8)
9	D1A	WH	CNX-D1A (C3-9)
10	D2A	GG	CNX-D2A (C3-10)
11	D3A	SB	CNX-D3A (C3-11)
12	D4A	PK	CNX-D4A (C3-12)

C10

Pin No.	Pin Name	Wire Color	Destination
1	ϕA	BR	CNX-ϕA (C4-1)
2	ϕB	RE	CNX-ϕB (C4-2)
3	$\overline{BUSY}$	OR	CNX-$\overline{BUSY}$ (C4-3)
4	$\overline{CMD0}$	YE	CNX-$\overline{CMD0}$ (C4-4)
5	$\overline{CMD2}$	GR	CNX-$\overline{CMD2}$ (C4-5)
6	$\overline{COMR}$	BE	CNX-$\overline{COMR}$ (C4-6)
7	$\overline{CTRLO}$	VI	CNX-$\overline{CTRLO}$ (C4-7)
8	$\overline{EXT}$	GY	CNX-$\overline{EXT}$ (C4-8)
9	$\overline{D2M}$	WH	CNX-$\overline{D2M}$ (C4-9)
10	$\overline{D3M}$	GG	CNX-$\overline{D3M}$ (C4-10)
11	$\overline{D4M}$	SB	CNX-$\overline{D4M}$ (C4-11)
12	G	PK	CNX-G (C4-12)

DC

C1

Pin No.	Pin Name	Wire Color	Destination
1	–7	GR	CR-M5V (C2-3)
2	Vss	BL	MK1-Vss (C9-5)
3	–12	BE	CR-MG (C2-1)
4	–15	–	–
5	E	–	–
6	+15S	RE	CNB-+15S (C3-1)

C2

Pin No.	Pin Name	Wire Color	Destination
1	–7	GR	LED-3
2	Vss	BL	CNB-Vss (C3-2)
3	–12	BE	CNB-–12 (C3-3)
4	–15	BR	CNB-–15 (C3-4)
5	E	BL	CNB-E (C3-5)
6	+15	OR	CNB-+15 (C3-6)

C3

Pin No.	Pin Name	Wire Color	Destination
1	–7	GR	RW-–7 (C8-1)
2	Vss	BL	RW-Vss (C8-2)
3	–12	BE	RW-–12 (C8-3)
4	–15	–	–
5	E	–	–
6	+15	–	–

C4

Pin No.	Pin Name	Wire Color	Destination
1	–7	GR	MPX-–7 (C9-1)
2	Vss	BL	MPX-Vss (C9-2)
3	–12	BE	MPX-–12 (C9-3)

C8

Pin No.	Pin Name	Wire Color	Destination
1	PSW1	BR	PSW-1
2	PSW2	BR	PSW-2

NOTES:

1. All Resistors are 1/4 watt unless otherwise specified.
2. All Capacitors are in microfarads unless otherwise specified.
3. All Keyswitches, Tabswitches and Pushbutton Switches shown in "off" position.
4. Capacitors
   - Δ mark : Tantalum Capacitor
   - O mark : Polystyrene Capacitor
   - K mark : Ceramic Capacitor 1000pF
5. ABBREVIATIONS OF WIRE COLOR IN ELECTONE

BL ..... BLACK	RE ..... RED
YE ..... YELLOW	BE ..... BLUE
GY ..... GRAY	GG ..... GRASS GREEN
PK ..... PINK	OR ..... ORANGE
BR ..... BROWN	VI ..... VIOLET
GR ..... GREEN	SB ..... SKY BLUE
WH ..... WHITE	TP ..... TIN PLATED WIRE

TR ..... TRANSPARENT
SOR ..... Shielding orange wire
SGRS..... Earthing conductor of shielding green wire

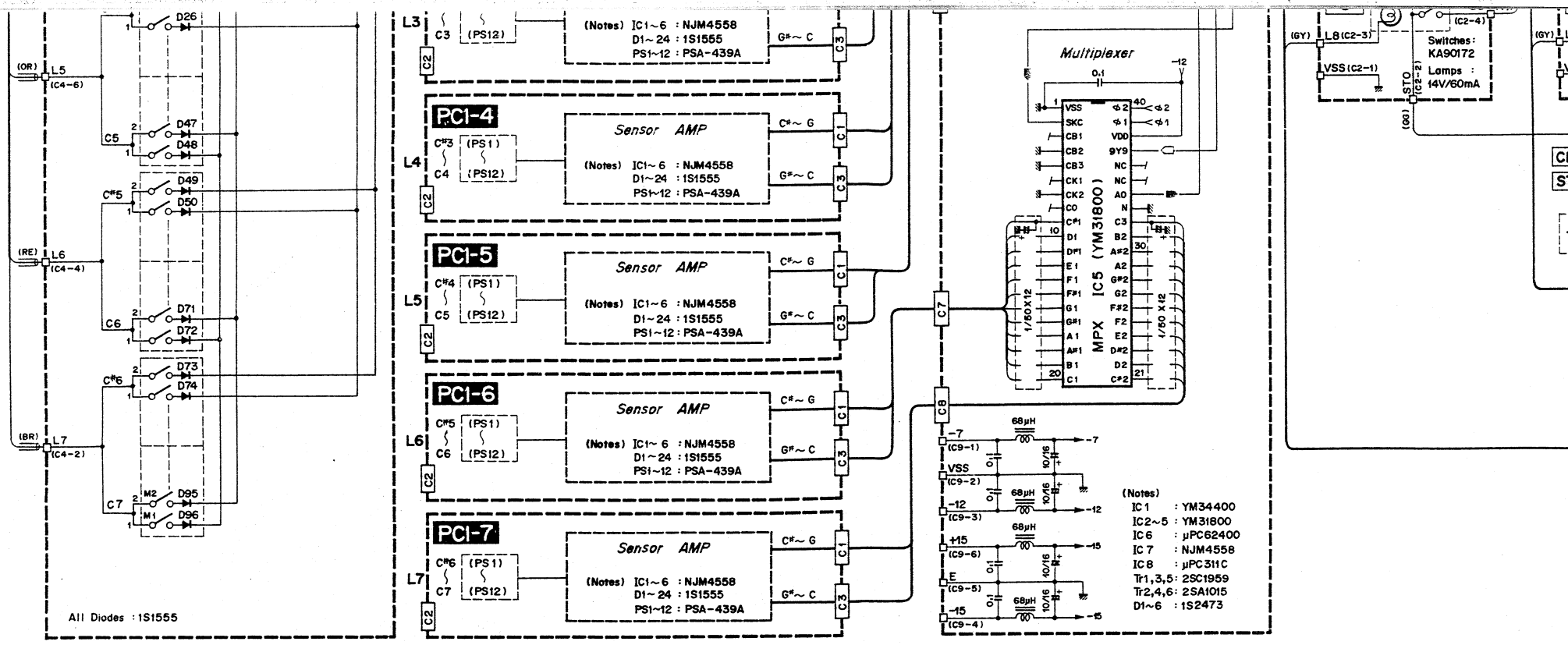

KC

C1

Pin No.	Pin Name	Wire Color	Destination
1	Vss	BL	DET-Vss (C1-3)
2	V1B	RE	A-PCO (C7-2)
3	IC	OR	A-IC (C5-2)
4			
5			

C2

Pin No.	Pin Name	Wire Color	Destination
1	φ2	–	–
2	16Y16	–	–
3	SCH	–	–
4	KCO	–	–
5	KCI	–	–
6	–12	–	–

C3

Pin No.	Pin Name	Wire Color	Destination
1	PS1	–	–
2	PS2	RE	TET-TRS (C1-3)
3	DP1	OR	DET-SD1 (C1-2)
4	DP2	–	–
5	DP3	GR	DET-SD2 (C1-1)
6	RP1	BE	DET-RD1 (C1-4)
7	RP2	VI	DET-RD2 (C1-5)
8	RP3	–	–
9	DAMP	WH	CNB-DAMP (C6-6)
10			

C4

Pin No.	Pin Name	Wire Color	Destination
1	L7	S GR	MK2-L7 (C4-2)
2	L6	S RE	MK2-L6 (C4-4)
3	L5	S OR	MK2-L5 (C4-6)
4	L4	S YE	MK2-L4 (C1-8)
5	L3	S GR	MK1-L3 (C6-2)
6	L2	S BE	MK1-L2 (C6-4)
7	L1	S VI	MK1-L1 (C1-1)
8	L0	S GY	MK1-L0 (C1-4)

C5

Pin No.	Pin Name	Wire Color	Destination
1	C#2	S BR	MK1-C#2 (C2-12)
2	C#1	S RE	MK1-C#1 (C2-9)
3	D2	S OR	MK1-D2 (C2-8)
4	D1	S YE	MK1-D1 (C2-5)
5	D#2	S GR	MK1-D#2 (C2-4)
6	D#1	S BE	MK1-D#1 (C2-1)
7	E2	S VI	MK1-E2 (C3-12)
8	E1	S GY	MK1-E1 (C3-9)
9	F2	S WH	MK1-F2 (C3-8)
10	F1	S GG	MK1-F1 (C3-5)
11	F#2	S SB	MK1-F#2 (C3-4)
12	F#1	S PK	MK1-F#1 (C3-1)

C6

Pin No.	Pin Name	Wire Color	Destination
1	G2	S BR	MK1-G2 (C4-12)
2	G1	S RE	MK1-G1 (C4-9)
3	G#2	S OR	MK1-G#2 (C4-8)
4	G#1	S YE	MK1-G#1 (C4-5)
5	A2	S GR	MK1-A2 (C4-4)
6	A1	S BE	MK1-A1 (C4-1)
7	A#2	S VI	MK1-A#2 (C5-12)
8	A#1	S GY	MK1-A#1 (C5-9)
9	B2	S WH	MK1-B2 (C5-8)
10	B1	S GG	MK1-B1 (C5-5)
11	C2	S SB	MK1-C2 (C5-4)
12	C4	S PK	MK1-C1 (C5-1)

C7

Pin No.	Pin Name	Wire Color	Destination
1	–7	GR	DC-–7 (C7-1)
2	Vss	BL	DC-Vss (C7-2)
3	–12	BE	DC-–12 (C7-3)
4	–	–	–
5	E	BL	DC-E (C7-5)
6	+15	OR	DC-+15 (C7-6)

C8

Pin No.	Pin Name	Wire Color	Destination
1	–	–	–
2	E10	YE	FM1-E10 (C1-4)
3	E9	OR	FM1-E9 (C1-3)
4	E8	RE	FM1-E8 (C1-2)
5	E7	BR	FM1-E7 (C1-1)

FM1

C1

Pin No.	Pin Name	Wire Color	Destination
1	E7	BR	KC-E7 (C8-5)
2	E8	RE	KC-E8 (C8-4)
3	E9	OR	KC-E9 (C8-3)
4	E10	YE	KC-E10 (C8-2)
5			

C2

Pin No.	Pin Name	Wire Color	Destination
1	–	–	–
2	Vss	BL	DC-Vss (C6-2)
3	–12	BE	DC-–12 (C6-3)
4	+15	OR	DC-+15 (C6-6)
5	E	BL	DC-E (C6-5)
6	–15	BR	DC-–15 (C6-4)

C3

Pin No.	Pin Name	Wire Color	Destination
1	E	–	–
2	E	–	–
3	E	S GR S	A-E (C8-4)
4	AO	S GR	A-AI1 (C8-5)
5	AO	–	–

FM2

C2

Pin No.	Pin Name	Wire Color	Destination
1	–	–	–
2	Vss	BL	DC-Vss (C5-2)
3	–12	BE	DC-–12 (C5-3)
4	+15	OR	DC-+15 (C5-6)
5	E	BL	DC-E (C5-5)
6	–15	BR	DC-–15 (C5-4)

C3

Pin No.	Pin Name	Wire Color	Destination
1	E	–	–
2	E	–	–
3	E	S BE S	A-E (C8-2)
4	AO	S BE	A-AI2 (C8-1)
5	AO	–	–

MPX

C1

Pin No.	Pin Name	Wire Color	Destination
1	C1	BR	PCB-C (C1-4)
2	BO	PK	PCB-B (C1-3)
3	A#O	SB	PCB-A# (C1-2)
4	AO	GG	PCB-A (C1-1)
5	–	–	–

C2

Pin No.	Pin Name	Wire Color	Destination
1	C2	BR	PCA1-C (C3-5)
2	B1	PK	PCA1-B (C3-4)
3	A#1	SB	PCA1-A# (C3-3)
4	A1	GG	PCA1-A (C3-2)
5	G#1	WH	PCA1-G# (C3-1)
6	G1	GY	PCA1-G (C1-7)
7	F#1	VI	PCA1-F# (C1-6)
8	F1	BE	PCA1-F (C1-5)
9	E1	GR	PCA1-E (C1-4)
10	D#1	YE	PCA1-D# (C1-3)
11	D1	OR	PCA1-D (C1-2)
12	C#1	RE	PCA1-C# (C1-1)

C3

Pin No.	Pin Name	Wire Color	Destination
1	C3	BR	PCA2-C (C3-5)
2	B2	PK	PCA2-B (C3-4)
3	A#2	SB	PCA2-A# (C3-3)
4	A2	GG	PCA2-A (C3-2)
5	G#2	WH	PCA2-G# (C3-1)
6	G2	GY	PCA2-G (C1-7)
7	F#2	VI	PCA2-F# (C1-6)
8	F2	BE	PCA2-F (C1-5)
9	E2	GR	PCA2-E (C1-4)
10	D#2	YE	PCA2-D# (C1-3)
11	D2	OR	PCA2-D (C1-2)
12	C#2	RE	PCA2-C# (C1-1)

C4

Pin No.	Pin Name	Wire Color	Destination
1	C4	BR	PCA3-C (C3-5)
2	B3	PK	PCA3-B (C3-4)
3	A#3	SB	PCA3-A# (C3-3)
4	A3	GG	PCA3-A (C3-2)
5	G#3	WH	PCA3-G# (C3-1)
6	G3	GY	PCA3-G (C1-7)
7	F#3	VI	PCA3-F# (C1-6)
8	F3	BE	PCA3-F (C1-5)
9	E3	GR	PCA3-E (1-4)
10	D#3	YE	PCA3-D# (C1-3)
11	D3	OR	PCA3-D (C1-2)
12	C#3	RE	PCA3-C# (C1-1)

C5

Pin No.	Pin Name	Wire Color	Destination
1	C5	BR	PCA4-C (C3-5)
2	B4	PK	PCA4-B (C3-4)
3	A#4	SB	PCA4-A# (C3-3)
4	A4	GG	PCA4-A (C3-2)
5	G#4	WH	PCA4-G# (C3-1)
6	G4	GY	PCA4-G (C1-7)
7	F#4	VI	PCA4-F# (C1-6)
8	F4	BE	PCA4-F (C1-5)
9	E4	GR	PCA4-E (C1-4)
10	D#4	YE	PCA4-D# (C1-3)
11	D4	OR	PCA4-D (C1-2)
12	C#4	RE	PCA4-C# (C1-1)

C6

Pin No.	Pin Name	Wire Color	Destination
1	C6	BR	PCA5-C (C3-5)
2	B5	PK	PCA5-B (C3-4)
3	A#5	SB	PCA5-A# (C3-3)
4	A5	GG	PCA5-A (C3-2)
5	G#5	WH	PCA5-G# (C3-1)
6	G5	GY	PCA5-G (C1-7)
7	F#5	VI	PCA5-F# (C1-6)
8	F5	BE	PCA5-F (C1-5)
9	E5	GR	PCA5-E (C1-4)
10	D#5	YE	PCA5-D# (C1-3)
11	D5	OR	PCA5-D (C1-2)
12	C#5	RE	PCA5-C# (C1-1)

C7

Pin No.	Pin Name	Wire Color	Destination
1	C7	BR	PCA6-C (C3-5)
2	B6	PK	PCA6-B (C3-4)
3	A#6	SB	PCA6-A# (C3-3)
4	A6	GG	PCA6-A (C3-2)
5	G#6	WH	PCA6-G# (C3-1)
6	G6	GY	PCA6-G (C1-7)
7	F#6	VI	PCA6-F# (C1-6)
8	F6	BE	PCA6-F (C1-5)
9	E6	GR	PCA6-E (C1-4)
10	D#6	YE	PCA6-D# (C1-3)
11	D6	OR	PCA6-D (C1-2)
12	C#6	RE	PCA6-C# (C1-1)

C8

Pin No.	Pin Name	Wire Color	Destination
1	C8	BR	PCA7-C (C3-5)
2	B7	PK	PCA7-B (C3-4)
3	A#7	SB	PCA7-A# (C3 3)
4	A7	GG	PCA7-A (C3-2)
5	G#7	WH	PCA7 (G# (C3-1)
6	G7	GY	PCA7-G (C1-7)
7	F#7	VI	PCA7-F# (C1-6)
8	F7	BE	PCA7-F (C1-5)
9	E7	GR	PCA7-E (C1-4)
10	D#7	YE	PCA7-D# (C1-3)
11	D7	OR	PCA7-D (C1-2)
12	C#7	RE	PCA7-C# (C1-1)

C9

Pin No.	Pin Name	Wire Color	Destination
1	–7	GR	DC-–7 (C4-1)
2	Vss	BL	DC-Vss (C4-2)
3	–12	BE	DC-–12 (C4-3)
4	–15	BR	DC-–15 (C4-4)
5	E	BL	DC-E (C4-5)
6	+15	OR	DC-+15 (C4-6)

RV

C1

Pin No.	Pin Name	Wire Color	Destination
1	S1	BR	SELL-S1 (C1-8)
2	L1	RE	SELL-L1 (C1-7)
3	S2	OR	SELL-S2 (C1-6)
4	L2	YE	SELL-L2 (C1-5)
5	S3	GR	SELL-S3 (C1-4)
6	L3	BE	SELL-L3 (C1-3)
7	S4	VI	SELL-S4 (C1-2)
8	L4	GY	SELL-L4 (C1-1)
9	WRITE	WH	CNB-WRITE (C7-6)
10	–12	BE	CNB-–12 (C7-7)

C2

Pin No.	Pin Name	Wire Color	Destination
1	S5	BR	SELL-S5 (C2-10)
2	L5	RE	SELL-L5 (C2-9)
3	S6	OR	SELL-S6 (C2-8)
4	L6	YE	SELL-L6 (C2-7)
5	S7	GR	SELL-S7 (C2-6)
6	L7	BE	SELL-L7 (C2-5)
7	S8	VI	SELL-S8 (C2-4)
8	L8	GY	SELL-L8 (C2-3)
9	STO	GG	SELL-STO (C2-2)
10	Vss	BL	SELL-Vss (C2-1)

C3

Pin No.	Pin Name	Wire Color	Destination
1	S1	BR	SELR-S1 (C1-8)
2	L9	RE	SELR-L9 (C1-7)
3	S2	OR	SELR-S2 (C1-6)
4	L10	YE	SELR-L10 (C1-5)
5	S3	GR	SELR-S3 (C1-4)
6	L11	BE	SELR-L11 (C1-3)
7	S4	VI	SELR-S4 (C1-2)
8	L12	GY	SELR-L12 (C1-1)
9	PLK	SB	CNB-PLK (C7-8)
10	S1	BR	CNB-S1 (C7-9)

C4

Pin No.	Pin Name	Wire Color	Destination
1	S5	BR	SELR-S5 (C2-8)
2	L13	RE	SELR-L13 (C12-7)
3	S6	OR	SELR-S6 (C2-6)
4	L14	YE	SELR-L14 (C2-5)
5	S7	GR	SELR-S7 (C2-4)
6	L15	BE	SELR-L15 (C2-3)
7	S8	VI	SELR-S8 (C2-2)
8	L16	GY	SELR-L16 (C2-1)
9	ST1	PK	SELR-ST1 (C1-9)
10	Vss	BL	SELR-Vss (C1-10)

C7

Pin No.	Pin Name	Wire Color	Destination
1	STRD	BR	LED-1
2	REV	RE	CR-REV (C1-1)
3	MSW	OR	CR-MSW (C1-6)
4	WPR	YE	CR-WPR (C1-5)
5	WEN	GR	CR-WEN (C1-3)
6	WDT	BE	CR-WDL (C1-4)
7	CLD	VI	CR-CLD (C1-7)
8	MON	GY	CR-MON (C1-8)
9	RCK	WH	CR-RCK (C1-9)
10	RDT	GG	CR-RDT (C1-10)
11	–7	GR	CR-+5V (C1-11)
12	–12	BE	CR-GND (C1-12)

7 GS1 OVERALL CIRCUIT DIAGRAM

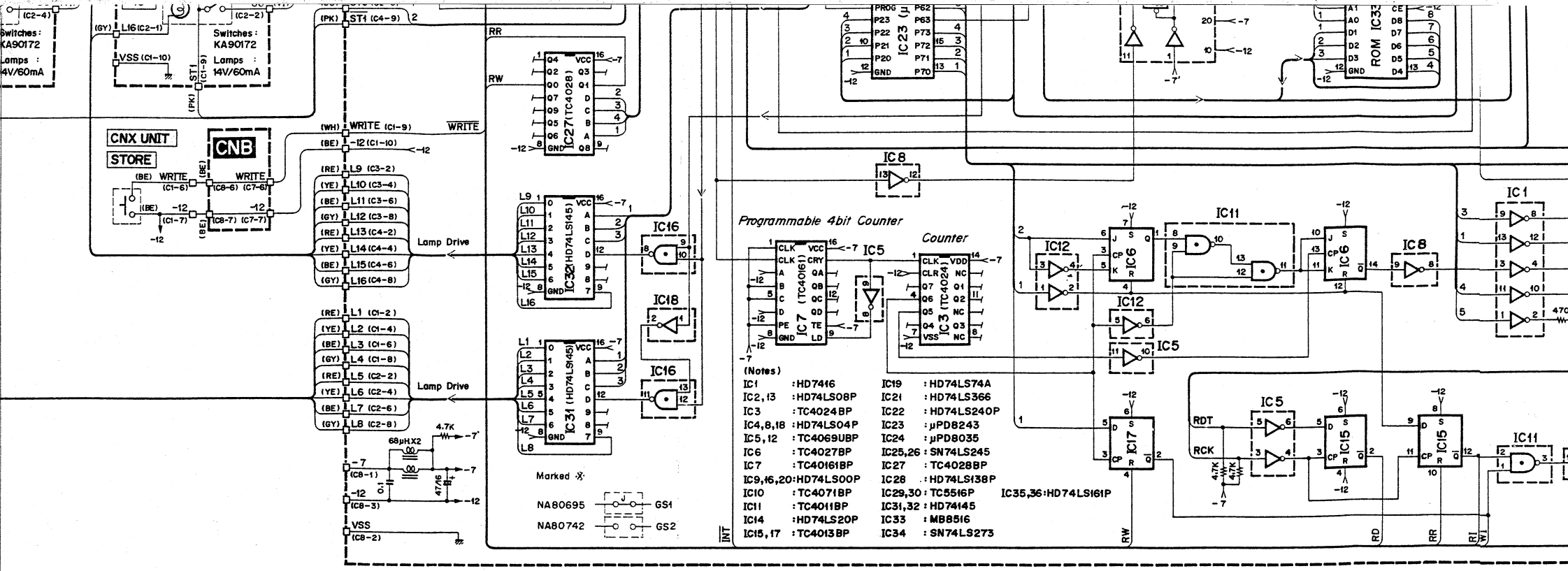

(Notes)

IC1	:HD7416	IC19	:HD74LS74A
IC2,13	:HD74LS08P	IC21	:HD74LS366
IC3	:TC4024BP	IC22	:HD74LS240P
IC4,8,18	:HD74LS04P	IC23	:μPD8243
IC5,12	:TC4069UBP	IC24	:μPD8035
IC6	:TC4027BP	IC25,26	:SN74LS245
IC7	:TC40161BP	IC27	:TC4028BP
IC9,16,20	:HD74LS00P	IC28	:HD74LS138P
IC10	:TC4071BP	IC29,30	:TC5516P
IC11	:TC4011BP	IC31,32	:HD74145
IC14	:HD74LS20P	IC33	:MB8516
IC15,17	:TC4013BP	IC34	:SN74LS273

IC35,36:HD74LS161P

RW

C1

Pin or	Destination
R	SELL-S1 (C1-8)
E	SELL-L1 (C1-7)
R	SELL-S2 (C1-6)
E	SELL-L2 (C1-5)
R	SELL-S3 (C1-4)
E	SELL-L3 (C1-3)
I	SELL-S4 (C1-2)
Y	SELL-L4 (C1-1)
H	CNB-WRITE (C7-6)
E	CNB- –12 (C7-7)

C2

Pin or	Destination
R	SELL-S5 (C2-10)
E	SELL-L5 (C2-9)
R	SELL-S6 (C2-8)
E	SELL-L6 (C2-7)
R	SELL-S7 (C2-6)
E	SELL-L7 (C2-5)
I	SELL-S8 (C2-4)
Y	SELL-L8 (C2-3)
G	SELL-STO (C2-2)
L	SELL-Vss (C2-1)

C3

Pin or	Destination
R	SELR-S1 (C1-8)
E	SELR-L9 (C1-7)
R	SELR-S2 (C1-6)
E	SELR-L10 (C1-5)
R	SELR-S3 (C1-4)
E	SELR-L11 (C1-3)
I	SELR-S4 (C1-2)
Y	SELR-L12 (C1-1)
B	CNB-PLK (C7-8)
R	CNB-S1 (C7-9)

C4

Pin or	Destination
R	SELR-S5 (C2-8)
E	SELR-L13 (C12-7)
R	SELR-S6 (C2-6)
E	SELR-L14 (C2-5)
R	SELR-S7 (C2-4)
E	SELR-L15 (C2-3)
I	SELR-S8 (C2-2)
Y	SELR-L16 (C2-1)
K	SELR-ST1 (C1-9)
L	SELR-Vss (C1-10)

C7

Pin or	Destination
R	LED-1
E	CR-REV (C1-1)
R	CR-MSW (C1-6)
E	CR-WPR (C1-5)
R	CR-WEN (C1-3)
E	CR-WDL (C1-4)
I	CR-CLD (C1-7)
Y	CR-MON (C1-8)
H	CR-RCK (C1-9)
G	CR-RDT (C1-10)
R	CR-+5V (C1-11)
E	CR-GND (C1-12)

C8

Pin No.	Pin Name	Wire Color	Destination
1	–7	GR	DC- –7 (C3-1)
2	Vss	BL	DC-Vss (C3-2)
3	–12	BE	DC- –12 (C3-3)
4			
5			
6			

C9

Pin No.	Pin Name	Wire Color	Destination
1	–12	BE	DC- –12 (C11-1)
2	PON	PK	DC-PON (C11-2)
3	–7B	VI	DC- –7B (C11-3)

MK1

C1

Pin No.	Pin Name	Wire Color	Destination
1	L1	S VI	KC-L1 (C4-7)
2	Vss	S VI S	
3	Vss	S GY S	
4	LO	S GY	KC-LO (C4-8)

C2

Pin No.	Pin Name	Wire Color	Destination
1	D # 1	S BE	KC-D # 1 (C5-6)
2	Vss	S BE S	
3	Vss	S GR S	
4	D # 2	S GR	KC-D # 2 (C5-5)
5	D1	SYE	KC-D1 (C5-4)
6	Vss	S YE S	
7	Vss	S OR S	
8	D2	S OR	KC-D2 (C5-3)
9	C # 1	S RE	KC-C # 1 (C5-2)
10	Vss	S RE S	
11	Vss	SBR S	
12	C # 2	S BR	KC-C # 2 (C5-1)

C3

Pin No.	Pin Name	Wire Color	Destination
1	F # 1	S PK	KC-F # 1 (C5-12)
2	Vss	S PK S	
3	Vss	S SB S	
4	F # 2	S SB	KC-F # 2 (C5-11)
5	F1	S GG	KC-F1 (C5-10)
6	Vss	S GG S	
7	Vss	S WH S	
8	F2	S WH	KC-F2 (C5-9)
9	E1	S GY	KC-E1 (C5-8)
10	Vss	S GY S	
11	Vss	S VI S	
12	E2	S VI	KC-E2 (C5-7)

C4

Pin No.	Pin Name	Wire Color	Destination
1	A1	S BE	KC-A1 (C6-6)
2	Vss	S BE S	
3	Vss	S GR S	
4	A7	S GR	KC-A2 (C6-5)
5	G # 1	S YE	KC-G # 1 (C6-4)
6	Vss	S YE S	
7	Vss	S OR S	
8	G # 2	S OR	KC-G # 2 (C6-3)
9	G1	S RE	KC-G1 (C6-2)
10	Vss	S RE S	
11	Vss	S BR S	
12	G2	S BR	KC-G2 (C6-1)

C5

Pin No.	Pin Name	Wire Color	Destination
1	C1	S PK	KC-C1 (C6-12)
2	Vss	S PK S	
3	Vss	S SB S	
4	C2	S SB	KC-C2 (C6-11)
5	B1	S GG	KC-B1 (C6-10)
6	Vss	S GG S	
7	Vss	S WH S	
8	B2	S WH	KC-B2 (C6-9)
9	A # 1	S GY	KC-A # 1 (C6-8)
10	Vss	S GY S	
11	Vss	S VI S	
12	A # 2	S VI	KC-A # 2 (C6-7)

C6

Pin No.	Pin Name	Wire Color	Destination
1	Vss	–	–
2	L3	S GR	KC-L3 (C4-5)
3	Vss	S GR S	
4	L2	S BE	KC-L2 (C4-6)
5	Vss	S BE S	

C7

Pin No.	Pin Name	Wire Color	Destination
1	C1	BR	MK2-C1 (C3-1)
2	C2	RE	MK2-C2 (C3-2)
3	B1	OR	MK2-B1 (C3-3)
4	B2	YE	MK2-B2 (C3-4)
5	A # 1	GR	MK2-A # 1 (C3-5)
6	A # 2	BE	MK2-A # 2 (C3-6)
7	A1	VI	MK2-A1 (C3-7)
8	A2	GY	MK2-A2 (C3-8)
9	G # 1	WH	MK2-G # 1 (C3-9)
10	G # 2	GG	MK2-G # 2 (C3-10)
11	G1	SB	MK2-G1 (C3-11)
12	G2	PK	MK2-G2 (C3-12)

C8

Pin No.	Pin Name	Wire Color	Destination
1	F # 1	BR	MK2-F # 1 (C1-1)
2	F # 2	RE	MK2-F # 2 (C1-2)
3	F1	OR	MK2-F1 (C1-3)
4	F2	YE	MK2-F2 (C1-4)
5	E1	GR	MK2-E1 (C1-5)
6	E2	BE	MK2-E2 (C1-6)
7	D # 1	VI	MK2-D # 1 (C1-7)
8	D # 2	GY	MK2-D # 2 (C1-8)
9	D1	WH	MK2-D1 (C1-9)
10	D2	GG	MK2-D2 (C1-10)

C9

Pin No.	Pin Name	Wire Color	Destination
1	C # 1	SB	MK2-C # 1 (C2-1)
2	C # 2	PK	MK2-C # 2 (C2-2)
3	Vss	BL	MK2-Vss (C2-3)
4	Vss	BL	MK2-Vss (C2-4)
5	Vss	BL	DC-Vss (C1-2)

MK2

C1

Pin No.	Pin Name	Wire Color	Destination
1	F # 1	BR	MK1-F # 1 (C8-1)
2	F # 2	RE	MK1-F # 2 (C8-2)
3	F1	OR	MK1-F1 (C8-3)
4	F2	YE	MK1-F2 (C8-4)
5	E1	GR	MK1-E1 (C8-5)
6	E2	BE	MK1-E2 (C8-6)
7	D # 1	VI	MK1-D # 1 (C8-7)
8	D # 2	GY	MK1-D # 2 (C8-8)
9	D1	WH	MK1-D1 (C8-9)
10	D2	GG	MK1-D2 (C8-10)

C2

Pin No.	Pin Name	Wire Color	Destination
1	C # 1	SB	MK1-C # 1 (C9-1)
2	C # 2	PK	MK1-C # 2 (C9-2)
3	Vss	BL	MK1-Vss (C9-3)
4	Vss	BL	MK1-Vss (C9-4)
5	Vss	–	–

C3

Pin No.	Pin Name	Wire Color	Destination
1	C1	BR	MK1-C1 (C7-1)
2	C2	RE	MK1-C2 (C7-2)
3	B1	OR	MK1-B1 (C7-3)
4	B2	YE	MK1-B2 (C7-4)
5	A # 1	GR	MK1-A # 1 (C7-5)
6	A # 2	BE	MK1-A # 2 (C7-6)
7	A1	VI	MK1-A1 (C7-7)
8	A2	GY	MK1-A2 (C7-8)
9	G # 1	WH	MK1-G # 1 (C7-9)
10	G # 2	GG	MK1-G # 2 (C7-10)
11	G1	SB	MK1-G1 (C7-11)
12	G2	PK	MK1-G2 (C7-12)

C4

Pin No.	Pin Name	Wire Color	Destination
1	Vss	S BR S	–
2	L7	S BR	KC-L7 (C4-1)
3	Vss	S RE S	
4	L6	S RE	KC-L6 (C4-2)
5	Vss	S OR S	
6	L5	S OR	KC-L5 (C4-3)
7	Vss	S YE S	
8	L4	S YE	KC-L4 (C4-4)

PCB

C1

Pin No.	Pin Name	Wire Color	Destination
1	A	GG	MPX-A0 (C1-3)
2	A #	SB	MPX-A # 0 (C1-3)
3	B	PK	MPX-B0 (C1-2)
4	C	BR	MPX-C1 (C1-1)
5			

PCA1

C1

Pin No.	Pin Name	Wire Color	Destination
1	C #	RE	MPX-G1 (C2-12)
2	D	OR	MPX-D1 (C2-11)
3	D #	YE	MPX-D # 1 (C2-10)
4	E	GR	MPX-E1 (C2-9)
5	F	BE	MPX-F1 (C2-8)
6	F #	VI	MPX-F # 1 (C2-7)
7	G	GY	MPX-G1 (C2-6)

C2

Pin No.	Pin Name	Wire Color	Destination
1	–15	BR	CNB- –15 (C4-3)
2	–15	BR	PCA2- –15 (C2-1)
3	E	BL	CNB-E (C4-5)
4	E	BL	PCA2-E (C2-3)
5	+15	RE	CNB-15S (C4-7)
6	+15	RE	PCA2-+15 (C2-5)
7	–	–	–

C3

Pin No.	Pin Name	Wire Color	Destination
1	G #	WH	MPX-G # 1 (C2-5)
2	A	GG	MPX-A1 (C2-4)
3	A #	SB	MPX-A # 1 (C2-3)
4	B	PK	MPX-B1 (C2-2)
5	C	BR	MPX-C2 (C2-1)
6	IC	GY	CNB-IC (C4-1)
7	IC	GY	PCA2-IC (C3-6)

PCA2

C1

Pin No.	Pin Name	Wire Color	Destination
1	C #	RE	MPX-C # 2 (C3-12)
2	D	OR	MPX-D2 (C3-11)
3	D #	YE	MPX-D # 2 (C3-10)
4	E	GR	MPX-E2 (C3-9)
5	F	BE	MPX-F2 (C3-8)
6	F #	VI	MPX-F # 2 (C3-7)
7	G	GY	MPX-G2 (C3-6)

C2

Pin No.	Pin Name	Wire Color	Destination
1	–15	BR	PCA1- –15 (C2-2)
2	–15	BR	PCA3- –15 (C2-1)
3	E	BL	PCA1-E (C2-4)
4	E	BL	PCA3-E (C2-3)
5	+15	OR	PCA1-+15 (C2-6)
6	+15	OR	PCA3-+15 (C2-5)
7	–	–	–

C3

Pin No.	Pin Name	Wire Color	Destination
1	G #	WH	MPX-G # 2 (C3-5)
2	A	GG	MPX-A2 (C3-4)
3	A #	SB	MPX-A # 2 (C3-3)
4	B	PK	MPX-B2 (C3-2)
5	C	BR	MPX-C3 (C3-1)
6	IC	GY	PCA1-IC (C3-7)
7	IC	GY	PCA3-IC (C3-6)

PCA3

C1

Pin No.	Pin Name	Wire Color	Destination
1	C #	RE	MPX-C 3 (C4-12)
2	D	OR	MPX-D (C4-11)
3	D #	YE	MPX-D 3 (C4-10)
4	E	GR	MPX-E (C4-9)
5	F	BE	MPX-F (C4-8)
6	F #	VI	MPX-F 3 (C4-7)
7	G	GY	MPX-G (C4-6)

C2

Pin No.	Pin Name	Wire Color	Destination
1	–15	BR	PCA2- –15 (C2-2)
2	–15	BR	PCA4- –15 (C2-1)
3	E	BL	PCA2-E (C2-4)
4	E	BL	PCA4-E (C2-3)
5	+15	OR	PCA2-+5 (C2-6)
6	+15	OR	PCA4-+5 (C2-5)
7	–	–	–

C3

Pin No.	Pin Name	Wire Color	Destination
1	G #	WH	MPX-G # 3 (C4-5)
2	A	GG	MPX-A3 (C4-4)
3	A #	SB	MPX-A # 3 (C4-3)
4	B	PK	MPX-B3 (C4-2)
5	C	BR	MPX-C4 (C4-1)
6	IC	GY	PCA2-IC (C3-7)
7	IC	GY	PCA4-IC (C3-6)

PCA4

C1

Pin No.	Pin Name	Wire Color	Destination
1	C #	RE	MPX-C # 4 (C5-12)
2	D	OR	MPX-D4 (C5-11)
3	D #	YE	MPX-D # 4 (C5-10)
4	E	GR	MPX-E4 (C5-9)
5	F	BE	MPX-F4 (C5-8)
6	F #	VI	MPX-F # 4 (C5-7)
7	G	GY	MPX-G4 (C5-6)

C2

Pin No.	Pin Name	Wire Color	Destination
1	–15	BR	PCA3- –15 (C2-2)
2	–15	BR	PCA5- –15 (C2-1)
3	E	BL	PCA3-E (C2-4)
4	E	BL	PCA5-E (C2-3)
5	+15	OR	PCA3-+15 (C2-6)
6	+15	OR	PCA5-+15 (C2-5)
7	–	–	–

C3

Pin No.	Pin Name	Wire Color	Destination
1	G #	WH	MPX-G # 4 (C5-5)
2	A	GG	MPX-A4 (C5-4)
3	A #	SB	MPX-A # 4 (C5-3)
4	B	PK	MPX-B4 (C5-2)
5	C	BR	MPX-C5 (C5-1)
6	IC	GY	PCA3-IC (C3-7)
7	IC	GY	PCA5-IC (C3-6)

F G H I J K L

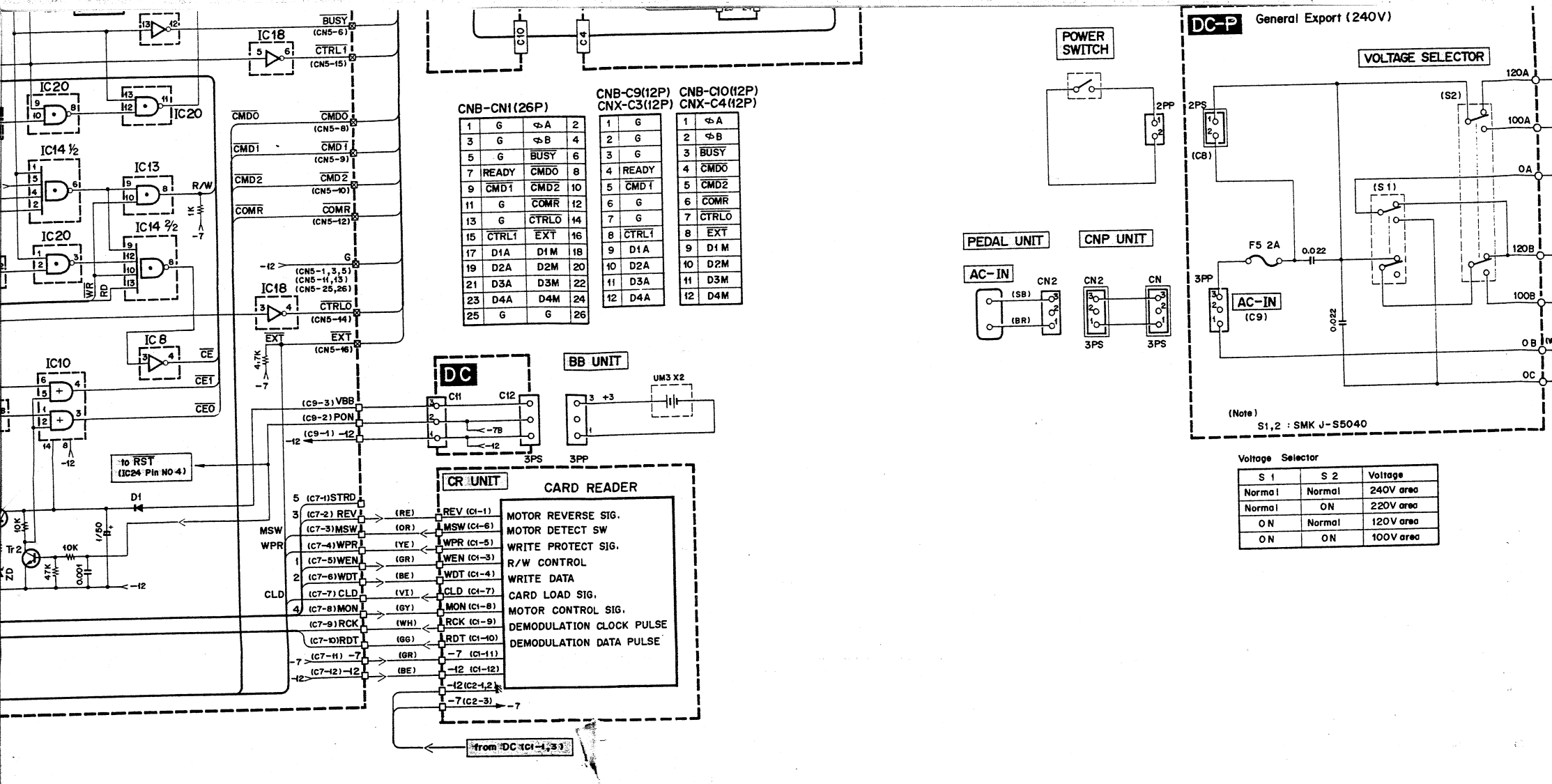

1	G	⇦A	2
3	G	⇦B	4
5	G	BUSY	6
7	READY	CMDO	8
9	CMD1	CMD2	10
11	G	COMR	12
13	G	CTRLO	14
15	CTRL1	EXT	16
17	D1A	D1M	18
19	D2A	D2M	20
21	D3A	D3M	22
23	D4A	D4M	24
25	G	G	26

1	G
2	G
3	G
4	READY
5	CMD1
6	G
7	G
8	CTRL1
9	D1A
10	D2A
11	D3A
12	D4A

1	⇦A
2	⇦B
3	BUSY
4	CMDO
5	CMD2
6	COMR
7	CTRLO
8	EXT
9	D1M
10	D2M
11	D3M
12	D4M

Voltage Selector

S1	S2	Voltage
Normal	Normal	240V area
Normal	ON	220V area
ON	Normal	120V area
ON	ON	100V area

A

PCA5

C1

Wire Color	Destination
E	MPX-C # 5 (C6-12)
R	MPX-D5 (C6-11)
E	MPX-D # 5 (C6-10)
R	MPX-E5 (C6-9)
E	MPX-F5 (C6-8)
I	MPX-F # 5 (C6-7)
Y	MPX-G5 (C6-6)

C2

Wire Color	Destination
R	PCA4- –15 (C2-2)
R	PCA6- –15 (C2-1)
L	PCA4-E (C2-4)
L	PCA6-E (C2-3)
R	PCA4-+15 (C2-6)
R	PCA6-+15 (C2-5)

C3

Wire Color	Destination
WH	MPX-G # 5 (C6-5)
GG	MPX-A5 (C6-4)
SB	MPX-A # 5 (C6-3)
PK	MPX-B5 (C6-2)
BR	MPX-C6 (C6-1)
GY	PCA4-IC (C3-7)
GY	PCA6-IC (C3-6)

PCA7

C1

Pin No.	Pin Name	Wire Color	Destination
1	C #	RE	MPX-C # 7 (C8-12)
2	D	OR	MPX-D7 (C8-11)
3	D #	YE	MPX-D # 7 (C8-10)
4	E	GR	MPX-E7 (C8-9)
5	F	BE	MPX-F7 (C8-8)
6	F #	VI	MPX-F # 7 (C8-7)
7	G	GY	MPX-G7 (C8-6)

C2

Pin No.	Pin Name	Wire Color	Destination
1	–15	BR	PCA6- –15 (C2-2)
2	–15	–	–
3	E	BL	PCA6-E (C2-4)
4	E	–	–
5	+15	OR	PCA6-+15 (C2-6)
6	+15	–	–
7	–	–	–

C3

Pin No.	Pin Name	Wire Color	Destination
1	G #	WH	MPX-G # 7 (C8-5)
2	A	GG	MPX-A7 (C8-4)
3	A #	SB	MPX-A # 7 (C8-3)
4	B	PK	MPX-B7 (C8-2)
5	C	BR	MPX-C8 (C8-1)
6	IC	GY	PCA6-IC (C3-7)
7	IC	–	–

PCA6

C1

Wire Color	Destination
RE	MPX-C # 6 (C7-12)
OR	MPX-D6 (C7-11)
YE	MPX-D # 6 (C7-10)
GR	MPX-E6 (C7-9)
BE	MPX-F6 (C7-8)
VI	MPX-F # 6 (C7-7)
GY	MPX-G6 (C7-6)

C2

Wire Color	Destination
BR	PCA5- –15 (C2-2)
BR	PCA7- –15 (C2-1)
BL	PCA5-E (C2-4)
BL	PCA7-E (C2-3)
OR	PCA5-+15 (C2-6)
OR	PCA7-+15 (C2-5)
–	–

C3

Wire Color	Destination
WH	MPX-G # 6 (C7-5)
GG	MPX-A5 (C7-4)
SB	MPX-A # 6 (C7-3)
PK	MPX-B6 (C7-2)
BR	MPX-C7 (C7-1)
GY	PCA5-IC (C3-7)
GY	PCA7-IC (C3-6)

C1

Pin No.	Pin Name	Wire Color	Destination
1	E	S BE S	
2	E	S VI S	
3	E	S GY S	
4	BAL2A	S BE	CNP-BAL2A (C1-4)
5	BAL2B	S VI	CNP-BAL2B (C1-5)
6	E	S WH S	
7	BAL1A	S GY	CNP-BAL1A (C1-7)
8	BAL1B	S WH	CNP-BAL1B (C1-8)

C2

Pin No.	Pin Name	Wire Color	Destination
1	E	–	–
2	E	S OR S	–
3	E	S YE S	–
4	MIX	S OR	CNP-MIX (C2-4)
5	E	S GR S	–
6	OUT2	S YE	CNP-OUT2 (C2-6)
7	OUT1	S GR	CNP-OUT1 (C2-7)

C3

Pin No.	Pin Name	Wire Color	Destination
1	–	–	–
2	–	–	–
3	E	BL	CNX-E (C2-1)
4	LAMP	YE	CNX-LAMP (C2-2)
5	HPO1	BR	CNX-HPO1 (C2-3)
6	HPO2	RE	CNX-HPO2 (C2-4)
7	E	BL	CNX-E (C2-5)

C4

Pin No.	Pin Name	Wire Color	Destination
1	EXP	BE	CNB-EXP (C7-2)
2	E	–	–
3	LIN	VI	CNB-LIN (C7-1)
4	E	–	–
5	TRMI2	S BR	EQ-EQO2 (C2-5)
6	E	S BR S	
7	TRMI1	S RE	EQ-EQO1 (C2-2)
8	E	S RE S	

C5

Pin No.	Pin Name	Wire Color	Destination
1	KON	YE	–
2	IC	OR	KC-IC (C1-3)
3	IC	GY	CNB-IC (C6-5)
4	IC	–	–
5	E	–	–
6	EO1	S OR	EQ-EQI1 (C1-2)
7	E	S OR S	–
8	ENSS	GR	TET-ENS (C1-4)
9	E	S YE S	–
10	EO2	S YE	EQ-EQI2 (C1-1)

C6

Pin No.	Pin Name	Wire Color	Destination
1	TRMDO	RE	EFF-TDI (C2-2)
2	TRMSI	OR	EFF-TRO (C2-3)
3	–	–	–
4	E	–	–
5	TRMSO	YE	EFF-TSI (C2-4)
6	TRMPO	GR	CNB-TRM (C6-7)
7	TRMSW	BE	TET-TRM (C1-5)
8	TRMDI	BR	EFF-TDO (C2-1)

C7

Pin No.	Pin Name	Wire Color	Destination
1	PC3	GR	CNB-PC3 (C7-5)
2	PC0	RE	KC-V1B (C1-2)
3	PC2	OR	CNB-PC2 (C7-4)
4	PC1	YE	CNB-PC1 (C7-3)
5	E	BL	EFF-E (C1-4)

C8

Pin No.	Pin Name	Wire Color	Destination
1	AI2	S BE	FM2-AO (C3-4)
2	E	S BE S	FM2-E (C3-3)
3	E	–	–
4	E	S GR S	FM1-E (C3-3)
5	AI1	S GR	FM1-AO (C3-4)

C9

Pin No.	Pin Name	Wire Color	Destination
1	V1BSP	VI	EFF-VSI (C1-3)
2	V1BPD	GG	CNB-V1B (C6-8)
3	–	–	–
4	V1BDI	GR	EFF-VDO (C1-1)
5	E	–	–
6	–	–	–
7	V1BDO	BE	EFF-VDI (C1-2)

C10

Pin No.	Pin Name	Wire Color	Destination
1	–12	BE	CNB- –12 (C2-1)
2	–15	BR	CNB- –15 (C2-3)
3	E	–	–
4	E	–	–
5	E	–	–
6	E	BL	CNB-E (C2-5)
7	+15	OR	CNB-+15 (C2-7)

DET

C1

Pin No.	Pin Name	Wire Color	Destination
1	SD2	GR	KC-DP3 (C3-5)
2	SD1	OR	KC-DP1 (C3-3)
3	Vss	BL	KC-PS2 (C1-1)
4	RD1	BE	KC-RP1 (C3-6)
5	RD2	VI	KC-RP2 (C3-7)

EFF

C1

Pin No.	Pin Name	Wire Color	Destination
1	VDD	GR	A-V1BDI (C9-4)
2	VDI	BE	A-V1BDO (C9-7)
3	VSI	VI	A-V1BSP (C9-1)
4	E	BL	A-E (C7-5)
5	E	–	–

C2

Pin No.	Pin Name	Wire Color	Destination
1	TDO	BR	A-TRMDI (C6-8)
2	TDI	RE	A-TRMDO (C6-1)
3	TSO	OR	A-TRMDI (C6-2)
4	TSI	YE	A-TRMSO (C6-5)
5	–	–	–

TET

C1

Pin No.	Pin Name	Wire Color	Destination
1	Vss	BL	CNB-Vss (C6-3)
2	–12	BE	CNB- –12 (C6-1)
3	TRS	RE	KC-PS2 (C3-2)
4	ENS	GR	A-ENSS (C5-8)
5	TRM	BE	A-TRMSW (C6-6)

SELL

C1

Pin No.	Pin Name	Wire Color	Destination
1	L4	GY	RW-L4 (C1-8)
2	S4	VI	RW-S4 (C1-7)
3	L3	BE	RW-L3 (C1-6)
4	S3	GR	RW-S3 (C1-5)
5	L2	YE	RW-L2 (C1-4)
6	S2	OR	RW-S2 (C1-3)
7	L1	RE	RW-L1 (C1-2)
8	S1	BR	RW-S1 (C1-1)

C2

Pin No.	Pin Name	Wire Color	Destination
1	Vss	BL	RW-Vss (C2-10)
2	STO	GG	RW-STO (C2-9)
3	L8	GY	RW-L8 (C2-8)
4	S8	VI	RW-S8 (C2-7)
5	L7	BE	RW-L7 (C2-6)
6	S7	GR	RW-S7 (C2-5)
7	L6	YE	RW-L6 (C2-4)
8	S6	OR	RW-S6 (C2-3)
9	L5	RE	RW-L5 (C2-2)
10	S5	BR	RW-S5 (C2-1)

SELR

C1

Pin No.	Pin Name	Wire Color	Destination
1	L12	GY	RW-L12 (C3-8)
2	S4	VI	RW-S4 (C3-7)
3	L11	BE	RW-L11 (C3-6)
4	S3	GR	RW-S3 (C3-5)
5	L10	YE	RW-L10 (C3-4)
6	S2	OR	RW-S2 (C3-3)
7	L9	RE	RW-L9 (C3-2)
8	S1	BR	RW-S1 (C3-1)
9	ST1	PK	RW-ST1 (C4-9)
10	Vss	BL	RW-Vss (C4-10)

C2

Pin No.	Pin Name	Wire Color	Destination
1	L16	GY	RW-L16 (C4-8)
2	S8	VI	RW-S8 (C4-7)
3	L15	BE	RW-L15 (C4-6)
4	S7	GR	RW-S7 (C4-5)
5	L14	YE	RW-L14 (C4-4)
6	S6	OR	RW-S6 (C4-3)
7	L13	RE	RW-L13 (C4-2)
8	S5	BR	RW-S5 (C4-1)

EQ

C1

Pin No.	Pin Name	Wire Color	Destination
1	EQI2	S YE	A-EO2 (C5-10)
2	EQI1	S OR	A-EO1 (C5-6)
3	E	–	–
4	E	–	–
5	E	BL	EQ-EP

C2

Pin No.	Pin Name	Wire Color	Destination
1	E	BL	CNB-E (C1-4)
2	EQO1	S RE	A-TRMI1 (C4-7)
3	–15	BR	CNB- –15 (C1-2)
4	+15	OR	CNB-+15 (C1-6)
5	EQO2	S BR	A-TRMI2 (C4-5)

CR

C1

Pin No.	Pin Name	Wire Color	Destination
1	REV	RE	RW-REV (C7-2)
2	–	–	–
3	WEN	GR	RW-WEN (C7-5)
4	WDT	BE	RW-WDT (C7-6)
5	WPR	YE	RW-WPR (C7-4)
6	MSW	OR	RW-MSW (C7-3)
7	CLD	VI	RW-CLD (C7-7)
8	MON	GY	RW-MON (C7-8)
9	RCK	WH	RW-RCK (C7-9)
10	RDT	GG	RW-RDK (C7-10)
11	+5V	GR	RW- –7 (C7-11)
12	GND	BE	RW- –12 (C7-12)

C2

Pin No.	Pin Name	Wire Color	Destination
1	MG	BE	DC- –12 (C1-3)
2	MG	–	–
3	M5V	GR	DC- –7 (C1-1)

CN

C1

Pin No.	Pin Name	Wire Color	Destination
1	–	–	–
2	–15	BR	EO- –15 (C2-3)
3	–15	–	–
4	E	BL	EO-E (C2-1)
5	E	–	–
6	+15	OR	EO-+15 (C2-4)
7	+15	–	–

C2

Pin No.	Pin Name	Wire Color	Destination
1	–12	BE	A- –12 (C10-1)
2	–12	–	–
3	–15	BR	A- –15 (C10-2)
4	–15	–	–
5	E	BL	A-E (C10-6)
6	E	–	–
7	+15	OR	A-+15 (C10-7)
8	+15	–	–

C3

Pin No.	Pin Name	Wire Color	Destination
1	15S	RE	DC-+15S (C1-6)
2	Vss	BL	DC-Vss (C2-2)
3	–12	BE	DC- –12 (C2-3)
4	–15	BR	DC- –15 (C2-4)
5	E	BL	DC-E (C2-5)
6	+15	OR	EC-+15 (C2-6)

M N O P Q R

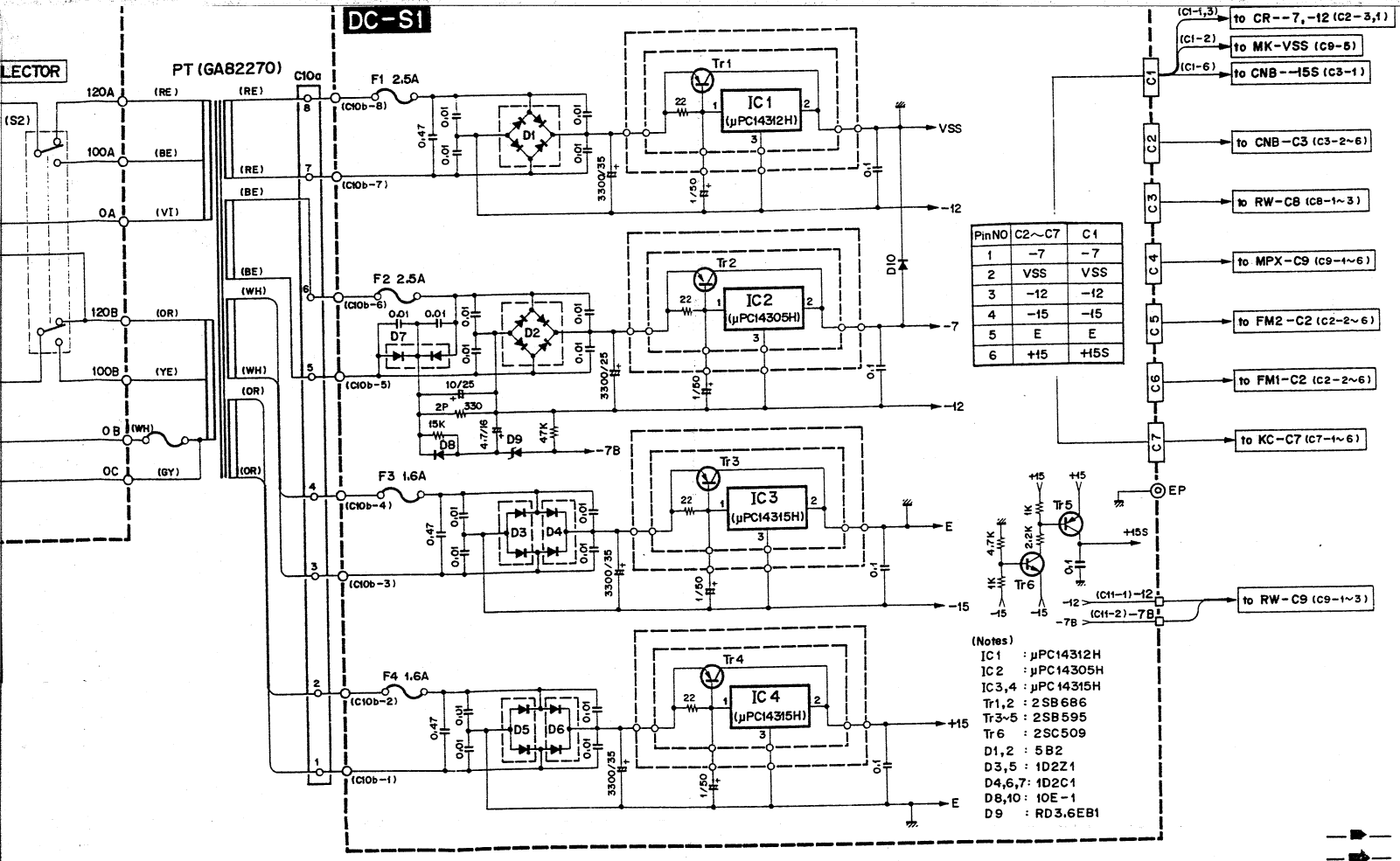

CR

C1

Wire Color	Destination
RE	RW-REV (C7-2)
–	–
GR	RW-WEN (C7-5)
BE	RW-WDT (C7-6)
YE	RW-WPR (C7-4)
OR	RW-MSW (C7-3)
VI	RW-CLD (C7-7)
GY	RW-MON (C7-8)
WH	RW-RCK (C7-9)
GG	RW-RDK (C7-10)
GR	RW- –7 (C7-11)
BE	RW- –12 (C7-12)

C2

Wire Color	Destination
BE	DC- –12 (C1-3)
–	–
GR	DC- –7 (C1-1)

CN

C1

Wire Color	Destination
–	–
BR	EQ- –15 (C2-3)
–	–
BL	EQ-E (C2-1)
–	–
OR	EQ-+15 (C2-4)
–	–

C2

Wire Color	Destination
BE	A- –12 (C10-1)
–	–
BR	A- –15 (C10-2)
–	–
BL	A-E (C10-6)
–	–
OR	A-+15 (C10-7)
–	–

C3

Wire Color	Destination
RE	DC-+15S (C1-6)
BL	DC-Vss (C2-2)
BE	DC- –12 (C2-3)
BR	DC- –15 (C2-4)
BL	DC-E (C2-5)
OR	EC-+15 (C2-6)

CNB

C4

Pin No.	Pin Name	Wire Color	Destination
1	IC	GY	PCA-IC (C3-6)
2	–15	–	–
3	–15	BR	PCA- –15 (C2-1)
4	E	–	–
5	E	BL	PCA-E (C2-3)
6	15S	–	–
7	15S	RE	PCA-+15 (C2-5)

C5

Pin No.	Pin Name	Wire Color	Destination
1	DAMP	WH	CNP-DAMP (C3-1)
2	TRM	GY	CNP-TREM (C3-2)
3	V1B	GG	CNP-V1B (C3-3)
4	E	BL	CNP-E (C3-4)
5	E	BL	CNP-E (C3-5)

C6

Pin No.	Pin Name	Wire Color	Destination
1	–12	BE	TET- –12 (C1-2)
2	–12	–	–
3	Vss	BL	TET-Vss (C1-1)
4	Vss	–	–
5	IC	GY	A-IC (C5-3)
6	DAMP	WH	KC-DAMP (C3-9)
7	TRM	GR	A-TRMPD (C6-7)
8	V1B	GG	A-V1B (C9-2)

C7

Pin No.	Pin Name	Wire Color	Destination
1	LIN	VI	A-LIN (C4-3)
2	EXP	BE	A-EXP (C4-1)
3	PC1	YE	A-PC1 (C7-4)
4	PC2	OR	A-PC2 (C7-3)
5	PC3	GR	A-PC3 (C7-1)
6	WRITE	WH	RW-WRITE (C1-9)
7	–12	BE	RW- –12 (C1-10)
8	PLK	SB	RW-PLK (C3-9)
9	S1	BB	RW-S1 (C3-10)
10	–	–	–

C8

Pin No.	Pin Name	Wire Color	Destination
1	LIN	BR	CNX-LIN (C1-1)
2	EXP	RE	CNX-EXP (C1-2)
3	PC1	OR	CNX-PC1 (C1-3)
4	PC2	YE	CNX-PC2 (C1-4)
5	PC3	GR	CNX-PC3 (C1-5)
6	WRITE	BE	CNX-WRITE (C1-6)
7	–12	BE	CNX- –12 (C1-7)
8	PLK	SB	CNX-PLK (C1-8)
9	S1	–	–
10	–	–	–

C9

Pin No.	Pin Name	Wire Color	Destination
1	G	BR	CNX-G (C3-1)
2	G	RE	CNX-G (C3-2)
3	G	OR	CNX-G (C3-3)
4	READY	YE	CNS-READY (C3-4)
5	$\overline{CMD1}$	GR	CNX-$\overline{CMD1}$ (C3-5)
6	G	BE	CNX-G (C3-6)
7	G	VI	CNX-G (C3-7)
8	$\overline{CTRL1}$	GY	CNX-$\overline{CTRL1}$ (C3-8)
9	D1A	WH	CNX-D1A (C3-9)
10	D2A	GG	CNX-D2A (C3-10)
11	D3A	SB	CNX-D3A (C3-11)
12	D4A	PK	CNX-D4A (C3-12)

C10

Pin No.	Pin Name	Wire Color	Destination
1	ϕA	BR	CNX-ϕA (C4-1)
2	ϕB	RE	CNX-ϕB (C4-2)
3	$\overline{BUSY}$	OR	CNX-$\overline{BUSY}$ (C4-3)
4	$\overline{CMD0}$	YE	CNX-$\overline{CMD0}$ (C4-4)
5	$\overline{CMD2}$	GR	CNX-$\overline{CMD2}$ (C4-5)
6	$\overline{COMR}$	BE	CNX-$\overline{COMR}$ (C4-6)
7	$\overline{CTRLO}$	VI	CNX-$\overline{CTRLO}$ (C4-7)
8	$\overline{EXT}$	GY	CNX-$\overline{EXT}$ (C4-8)
9	$\overline{D2M}$	WH	CNX-$\overline{D2M}$ (C4-9)
10	$\overline{D3M}$	GG	CNX-$\overline{D3M}$ (C4-10)
11	$\overline{D4M}$	SB	CNX-$\overline{D4M}$ (C4-11)
12	G	PK	CNX-G (C4-12)

BB

C1

Pin No.	Pin Name	Wire Color	Destination
1	–12	BE	DC- –12 (C12-1)
2	–	–	–
3	–7B	VI	DC- –7B (C12-3)

DC

C1

Pin No.	Pin Name	Wire Color	Destination
1	–7	GR	CR-M5V (C2-3)
2	Vss	BL	MK1-Vss (C9-5)
3	–12	BE	CR-MG (C2-1)
4	–15	–	–
5	E	–	–
6	+15S	RE	CNB-+15S (C3-1)

C2

Pin No.	Pin Name	Wire Color	Destination
1	–7	GR	LED-3
2	Vss	BL	CNB-Vss (C3-2)
3	–12	BE	CNB- –12 (C3-3)
4	–15	BR	CNB- –15 (C3-4)
5	E	BL	CNB-E (C3-5)
6	+15	OR	CNB-+15 (C3-6)

C3

Pin No.	Pin Name	Wire Color	Destination
1	–7	GR	RW- –7 (C8-1)
2	Vss	BL	RW-Vss (C8-2)
3	–12	BE	RW- –12 (C8-3)
4	–15	–	–
5	E	–	–
6	+15	–	–

C4

Pin No.	Pin Name	Wire Color	Destination
1	–7	GR	MPX- –7 (C9-1)
2	Vss	BL	MPX-Vss (C9-2)
3	–12	BE	MPX- –12 (C9-3)
4	–15	BR	MPX- –15 (C9-4)
5	E	BL	MPX-E (C9-5)
6	+15	OR	MPX-+15 (C9-6)

C5

Pin No.	Pin Name	Wire Color	Destination
1	–7	–	–
2	Vss	BL	FM2-Vss (C2-2)
3	–12	BE	FM2- –12 (C2-3)
4	–15	BR	FM2- –15 (C2-4)
5	E	BL	FM2-E (C2-5)
6	+15	OR	FM2-+15 (C2-6)

C6

Pin No.	Pin Name	Wire Color	Destination
1	–7	–	–
2	Vss	BL	FM-Vss (C2-2)
3	–12	BE	FM1- –12 (C2-3)
4	–15	BR	FM1- –15 (C2-4)
5	E	BL	FM1-E (C2-5)
6	+15	OR	FM1-+15 (C2-6)

C7

Pin No.	Pin Name	Wire Color	Destination
1	–7	GR	KC- –7 (C7-1)
2	Vss	BL	KC-Vss (C7-2)
3	–12	BE	KC- –12 (C7-3)
4	–15	–	–
5	E	BL	KC-E (C7-5)
6	+15	OR	KC-+15 (C7-6)

C8

Pin No.	Pin Name	Wire Color	Destination
1	PSW1	BR	PSW-1
2	PSW2	BR	PSW-2

C9

Pin No.	Pin Name	Wire Color	Destination
1	AC1	SB	CNP-AC1 (C2-1)
2	–	–	–
3	AC2	BR	CNP-AC2 (C2-3)

C10

Pin No.	Pin Name	Wire Color	Destination
1			
2			
3			
4			
5			
6			
7			
8			
9			
10			

C11

Pin No.	Pin Name	Wire Color	Destination
1	–12	BE	RW- –12 (C9-1)
2	PON	PK	RW-PON (C9-2)
3	–7B	VI	RW- –7B (C9-3)

NOTES:

1. All Resistors are 1/4 watt unless otherwise specified.
2. All Capacitors are in microfarads unless otherwise specified.
3. All Keyswitches, Tabswitches and Pushbutton Switches shown in "off" position.
4. Capacitors
   - △ mark : Tantalum Capacitor
   - ○ mark : Polystyrene Capacitor
   - K mark : Ceramic Capacitor 1000pF
5. ABBREVIATIONS OF WIRE COLOR IN ELECTONE

BL ..... BLACK	RE ..... RED
YE ..... YELLOW	BE ..... BLUE
GY ..... GRAY	GG ..... GRASS GREEN
PK ..... PINK	OR ..... ORANGE
BR ..... BROWN	VI ..... VIOLET
GR ..... GREEN	SB ..... SKY BLUE
WH ..... WHITE	TP ..... TIN PLATED WIRE

TR ..... TRANSPARENT
SOR ..... Shielding orange wire
SGRS..... Earthing conductor of shielding green wire

S T U V W

GS1 OVERALL CIRCUIT DIAGRAM

YAMAHA

GS2

PARTS LIST

CONTENTS

A. Electronic Components (電気部品)..... 1
B. Control Panel Assembly (コントロールパネル)..... 6
C. Pedal Assembly (ペダルAss'y)..... 8
D. D Rack & Power Supply Unit(Dラック及び電源ユニット)..... 10
E. Keyboard Assembly (鍵盤)..... 12
F. Cabinet (外装)..... 14

Printed in Japan

A. Electronic Components (電気部品)

	Ref. No.	Part No.	Description		部品名	Remarks	Common Model	Markets
		NA 80 69 20	Circuit Board	FM #8605	F M シート		GS1	
		NA 80 69 30	– do. –	KC #8606	K C シート		GS1	
		NA 80 69 60	– do. –	A #8609	A シート		GS1	
※		NA 80 73 80	– do. –	MK3 #8639	M K 3 シート			
※		NA 80 74 10	– do. –	MK4 #8610	M K 4 シート			
※		NA 80 74 01	– do. –	PN-EFF #8637	PN-EFF シート			
※		NA 80 74 02	– do. –	PN-SEL-L #8637	PN-SEL-Lシート			
※		NA 80 74 03	– do. –	PN-SEL-R #8637	PN-SEL-Rシート			
※		NA 80 74 04	– do. –	PN-EQ #8637	PN-EQ シート			
※		NA 80 74 05	– do. –	PN-STO #8637	PN-STO シート			
※		NA 80 74 20	– do. –	RW #8608	R W シート			
※		NA 80 73 90	– do. –	DC #8638	D C シート			J
※		NA 80 74 60	– do. –	– do. – #8638	〃			U,C
※		NA 80 74 70	– do. –	– do. – #8638	〃			G
※		NA 80 83 50	– do. –	AC #8626	A C シート			J
※		NA 80 83 60	– do. –	– do. – #8626	〃			U,C
※		NA 80 83 70	– do. –	– do. – #8626	〃			G
		iG 00 11 80	IC	TC4013BP	I C	D Flip-Flop		
		iG 00 12 40	– do. –	TC4011BP	〃	2-input NAND		
		iG 00 12 50	– do. –	TC4027BP	〃	J-K Flip-Flop		
		iG 00 13 90	– do. –	NJM4558DV	〃	OP. Amp		
		iG 00 16 00	– do. –	BA634	〃	Divider		
		iG 00 16 90	– do. –	TC4016BP	〃	Bilateral SW		
		iG 00 17 20	– do. –	TC4069UBP	〃	Inverter		
		iG 00 17 70	– do. –	TC4051BP	〃	8ch Multiplexer		
		iG 00 18 40	– do.–	HD7400	〃	2-input NANDx4		
		iG 02 60 00	– do. –	#02600	〃	VCA		
		iG 02 65 00	– do. –	HD7416P	〃	Inverter		
		iG 02 68 10	– do. –	HD74LS20P	〃	4-input NANDx2		
		iG 02 69 10	– do. –	HD74LS00P	〃	2-input NANDx4		
		iG 02 70 00	– do. –	HD7404P	〃	Inverter		
		iG 02 70 10	– do. –	HD74LS04P	〃	Inverter		
		iG 02 87 00	– do. –	μPC14315P	〃	+15V Regulator		
		iG 03 29 00	– do. –	iG03290	〃	BBD Driver		
		iG 03 32 00	– do. –	μPC14312H	〃	+12V Regulator		
		iG 03 33 00	– do. –	μPC14305H	〃	+5V – do. –		
		iG 03 35 00	– do. –	μPC610D	〃	10 bit D/A Convertor		
		iG 03 55 00	– do. –	TC4028BP	〃	Decoder		
		iG 03 81 00	– do. –	TC4024BP	〃	Counter		
		iG 04 35 00	– do. –	TC40161BP	〃	Programmable 4 bit counter		
		iG 04 37 00	– do. –	HD74LS08P	〃	AND		
		iG 04 38 00	– do. –	HD7417P	〃	Buffer		
		iG 04 40 00	– do. –	HD74LS74AP	〃	D Flip-Flop		
		iG 04 42 00	– do. –	HD74LS138P	〃	Decoder/Demultiplexer		
		iG 04 43 00	– do. –	HD74145P	〃	BCD to Decimal Decoder		
		iG 04 44 00	– do. –	HD74LS161P	〃	Synchronous 4 bit Counter		
		iG 04 45 00	– do. –	HD74LS240P	〃	Buffer x 8		
		iG 04 46 00	– do. –	SN74LS245	〃	Octal Bus Transceivers		
		iG 04 47 00	– do. –	SN74LS273	〃	Octal D Flip-Flop		
		iG 04 48 00	– do. –	SN75366N	〃	NAND(TTL to MOS)		
		iG 04 49 00	– do. –	μPD8035	〃	CPU		
		iG 04 50 00	– do. –	μPD8243	〃	I/O EXP		

※ New Parts (新規部品) (J : Japan, U : US.American, C : Canadian, G : General)

Ref. No.	Part No.	Description	部品名	Remarks	Common Model	Markets
	iG 04 52 00	IC TC5516P	I C	2KX8 bit RAM		
	iG 04 53 00	– do. – TC4009UBP	〃	Inverter		
	iG 04 61 00	– do. – MN3009	〃	256 Stage BBD		
	iG 04 80 00	– do. – HD74LS366	〃	Bus Driver		
	iG 05 28 00	– do. – TC40H032P	〃	2-input OR x 4		
	iT 31 10 00	– do. – YM311	〃	KC		
	iT 31 20 00	– do. – YM312	〃	CP		
	iT 31 60 00	– do. – YM316	〃	ACC		
	iT 32 00 00	– do. – YM320	〃	IG		
	iT 32 10 00	– do. – YM321	〃	EG		
	iT 32 20 00	– do. – YM322	〃	EC		
	iT 32 70 00	– do. – YM327	〃	ADD		
	iT 34 40 00	– do. – YM344	〃	PG		
	iT 34 50 10	– do. – YM34501	〃	OPC		
	iT 34 50 20	– do. – YM34502	〃	OPM		
	iT 34 70 00	– do. – YM347	〃	VRG		
	iT 63 30 00	– do. – YM633	〃	SEC II		
	iN 00 33 00	– do. – MB8516	〃	EP ROM iG04510		
	iA 05 09 10	Transistor 2SA509(Y)	トランジスタ			
	iA 07 43 00	– do. – 2SA743A(B)	〃			
	iA 10 15 70	– do. – 2SA1015(O,Y)	〃			
	iC 04 58 30	– do. – 2SC458(C)	〃			
	iC 04 58 80	– do. – 2SC458(B,C)	〃			
	iC 04 58 90	– do. – 2SC458LG(C,D)	〃			
	iC 04 59 00	– do. – 2SC458(C,D)	〃			
	iC 05 09 20	– do. – 2SC509(Y)	〃			
	iC 07 52 30	– do. – 2SC752(O.Y)	〃			
	iC 12 12 00	– do. – 2SC1212A(C)	〃			
	iC 19 59 30	– do. – 2SC1959 (O,Y)	〃			
	iE 10 12 00	FET 2SK105F	FET			
	iF 00 00 10	Diode 1N34A	ダイオード			
	iF 00 00 40	– do. – 1S1555	〃			
	iF 00 00 70	– do. – 1S2473VE	〃			
	iF 00 08 80	– do. – Zener WZ-050	ツェナーダイオード			
	iF 00 16 60	– do. – – do. – RZ3.6EB1	〃			
	iH 00 01 10	– do. – 5B-2	ダイオード			
	iH 00 02 80	– do. – 1D2C1	〃			
	iH 00 02 90	– do. – 1D2Z1	〃			
	iH 00 05 90	– do. – 10E-1	〃			
	iK 00 02 90	Photo-Coupler P873-13	フォトカプラー			
	FC 08 54 70	Metalized Myler Cap. 0.47μF/100V	MMコンデンサ			
	FD 15 21 80	Polystyrene Cap 180PF	スチコン			
	FD 15 22 70	– do. – 270PF	〃			
	FD 15 23 30	– do. – 330PF	〃			
	FM 09 62 20	Bipolar Electrolytic Cap. 2.2μF/16V	バイポーラケミコン			
	FM 09 63 30	– do. – 3.3μF/16V	〃			

※ New Parts (新規部品)

Ref. No.	Part No.	Description	部品名	Remarks	Common Model	Markets
	FM 09 64 70	Bipolar Electrolytic Cap. 4.7μF/16V	バイポーラケミコン			
	FM 09 71 00	— do. — 10μF/16V	〃			
	FM 09 72 20	— do. — 22μF/16V	〃			
	FM 22 61 00	— do. — 1μF/25V	〃			
	FZ 00 22 50	Spark Suppressor Cap. 0.022μF	スパークキラー			
	FZ 00 23 90	Electrolytic Cap. 3300μF/25V	ケミコン			
	FZ 00 24 00	— do. — 3300μF/35V	〃			
	HL 31 54 70	Metal Oxide Film Resistor 470Ω 1W	酸金抵抗			
	HV 55 42 20	Flame Proof Carbon Resistor 22Ω	不燃化カーボン抵抗			
	HV 55 44 70	— do. — 47Ω	〃			
	HV 55 51 00	— do. — 100Ω	〃			
	HZ 00 16 70	Module Resistor 4.7KΩx8	モジュール抵抗			
	HZ 00 16 80	— do. — 4.7KΩx12	〃			
	HZ 00 16 90	— do. — 10KΩx12	〃			
	HZ 00 17 00	— do. — 27KΩx12	〃			
	HZ 00 17 10	— do. — 100KΩx10	〃			
	HZ 00 17 20	— do. — 470KΩx12	〃			
	HZ 00 17 30	Metal Film Resistor 1KΩ ±0.1%	金皮抵抗			
	HZ 00 17 40	— do. — 2KΩ ±0.1%	〃			
	HS 31 05 50	Variable Resistor A10KΩ	可変抵抗器	Vib. Depth, Tre. Depth		
※	HS 31 11 60	— do. — B5KΩ	〃	Tune		
※	HS 31 12 40	— do. — G50KΩx2	〃	Treb. Mid. Bass		
※	HS 31 12 50	— do. — A50KΩx2	〃	Vol.		
※	HS 31 13 30	— do. — C100KΩ	〃	Vib. Speed		
※	HS 31 14 00	— do. — C250KΩ	〃	Tre. Speed		
	HT 19 00 50	Variable Resistor B10KΩ	半固定抵抗			
	HT 19 00 60	— do. — B20KΩ	〃			
	HT 19 00 70	— do. — B50KΩ	〃			
	HT 19 01 30	— do. — B2KΩ	〃			
	LB 30 01 60	Cannon Socket XLR3-32	キャノンソケット			
	LB 20 18 20	AC Inlet 2P	2Pインレット			J.U.C
	LB 30 07 30	Base Pin 3P	2.5ピッチベースピン	Top Entry		
	LB 50 02 50	— do. — 5P	〃	— do. —		
	LB 60 24 60	— do. — 7P	〃	— do. —		
	LB 60 24 90	— do. — 8P	〃	— do. —		
	LB 60 24 70	— do. — 10P	〃	— do. —		
	LB 60 31 30	— do. — 12P	〃	— do. —		
	LB 50 02 70	— do. — 5P	〃	Side Entry		
	LB 60 37 00	— do. — 6P	〃	— do. —		
	LB 50 03 70	— do. — 5P	〃	Bottom Entry		
	LB 60 30 60	— do. — 8P	〃	— do. —		
	LB 60 30 70	— do. — 10P	〃	— do. —		
	LB 30 07 20	Housing 3P	2.5ピッチハウジング			
	LB 50 02 40	— do. — 5P	〃			
	LB 60 36 80	— do. — 6P	〃			
	LB 60 24 40	— do. — 7P	〃			
	LB 60 24 80	— do. — 8P	〃			

※ New Parts (新規部品)

Ref. No.	Part No.	Description	部品名	Remarks	Common Model	Markets
	LB 60 24 50	Housing 10P	2.5ピッチハウジング			
	LB 60 29 20	— do. — 12P	〃			
	LB 60 24 20	Header 20P	ヘッダー			
	LB 60 35 50	— do. — 26P	〃			
	LB 60 24 30	— do. — 30P	〃			
	LB 60 39 00	IC Socket 24P	ICソケット			
	LB 60 39 10	— do. — 40P	〃			
	LB 20 15 30	Fuse Holder Pin	ヒューズホルダーピン			
	LB 20 05 70	— do. —	〃			
	LB 20 11 20	Jack	ジャック			
	LB 20 15 40	— do. —	〃			
	LB 20 18 60	AC Inlet	ACインレット			G
	LB 40 08 20	Housing 4P(Plug)	ハウジング			
	LB 40 08 30	— do. — 4P	〃			
※	LB 40 08 80	Connector	コネクター			
	LB 60 15 50	Connector Cap 9P	9Pキャップ			
	LB 60 16 70	Pin Contact	ピンコンタクト			
	LB 60 37 50	Housing 8P(Plug)	ハウジング			
	LB 60 37 70	— do. — 8P	〃			
※	LB 60 38 80	Plug 4P	4Pプラグ			
	LB 60 39 70	Connector 6P	コネクター			
	LB 60 39 90	— do. — 8P	〃			
	LB 60 40 20	Housing 6P	ハウジング			
	LB 60 40 40	— do. — 8P	〃			
	BB 00 44 30	Contact	2.5ピッチコンタクトピン			
	BB 00 44 90	— do. —	コンタクトピン メス	Female		
	BB 00 46 90	— do. —	コンタクトピン オス	Male		
	BB 00 49 90	— do. —	〃			
	KB 00 06 90	Fuse (Miniature) T2.5A 250V	ミニチュアヒューズ			G
	KB 00 07 40	— do. — — do. — T1.6A — do. —	〃			G
	KB 00 23 50	— do. — — do. — 1.6A — do. —	〃			J
	KB 00 23 70	— do. — — do. — 2.5A — do. —	〃			J
	KB 00 25 00	— do. — — do. — 1.6A 125V	〃			U,C
	KB 00 25 20	— do. — — do. — 2.5A — do. —	〃			U,C
	NB 81 60 60	Card Reader Unit	カードリーダーユニット			
	NB 81 61 50	Key Switch Unit I	スイッチユニット I	6		
	NB 81 61 60	— do. — II	〃 II	4		
	NB 03 70 40	Tablet Switch	タブレットスイッチ	Pedal		
※	NB 81 71 40	Power Supply Unit	電源ユニット			J
※	NB 81 72 90	— do. —	〃			U,C
※	NB 81 73 00	— do. —	〃			G
※	NB 81 74 10	Power Transformer Unit	電源トランスユニット			
	MG 00 10 30	AC Cord	電源コード			J
	MG 00 10 40	— do. —	〃			U
	MG 00 10 50	— do. —	〃			G
	MG 00 11 20	— do. —	〃			C
	MZ 80 85 50	Flat Cable Assy FM 30P	FM線材キット			
	MZ 80 85 80	— do. — TD 20P	TD 〃			

※ New Parts (新規部品)

	Ref. No.	Part No.	Description	部品名	Remarks	Common Model	Markets
※		MZ 80 93 20	Flat Cable Ass'y 26P	TD線材キット			
		KA 40 05 00	Slide Switch	スライドスイッチ	Line Out		
		KA 40 07 00	— do. —	〃	PGM Lock		
		KA 40 08 30	Voltage Selector	電圧切替器			
		KA 10 10 60	See-Saw Switch	電源スイッチ	Power		
		KA 50 14 30	Rotary Switch 3-3	ロータリースイッチ	Detune		
		KA 90 17 00	Push Switch GY	プッシュスイッチ	Tremolo, Ensemble, Store	SK20	
※		KA 90 17 10	— do. — WH	〃	Tone Sel.		
		GD 90 02 50	Line Transformer	ライントランス			
		GE 30 03 50	Choke Coil 68μH	チョークコイル			
※		GE 90 05 00	Coil CK4	コイル			U,C
※		GE 90 05 30	Coil CK6	〃			U,C
		QU 00 10 00	Ceramic Vibrator 6.00MHz	セラミック発振子			
		CB 07 28 80	Insulation Bushing	絶縁ブッシュ			
		iL 00 05 80	Mica Base	マイカベース			
		NB 81 60 60	Card Reader Unit	カードリーダーユニット			
		NX 80 01 10	Mech. Unit, Card Reader K90-0799	メカユニット			
		NX 80 01 20	Circuit Board, — do. — K90-0711	C/Rシート			
		iX 00 01 10	IC TDA1041-RP12	IC	E60-0039		
		iX 00 01 20	— do. — EHMD226W34	〃	E60-0040		
		iX 00 01 30	— do. — M5923	〃	E60-1092		
		iG 05 26 00	— do. — HD74LS05P	〃	E60-1140		
		iA 05 64 90	Transistor 2SA564(S)	トランジスタ	E65-6054		
		iX 00 01 40	— do. — 2SA683-R	〃	E65-6089		
		iX 00 01 50	Diode 1S1558	ダイオード	E65-5001		
		iH 00 00 30	— do. — 10D1	〃	E65-5002		
		KX 00 00 20	Relay RZ-5	リレー	E62-1105		
		HX 00 00 10	Variable Resistor B1.5KΩ	半固定抵抗	E62-9540		

※ New Parts (新規部品)

B. Control Panel Assembly（コントロールパネル）

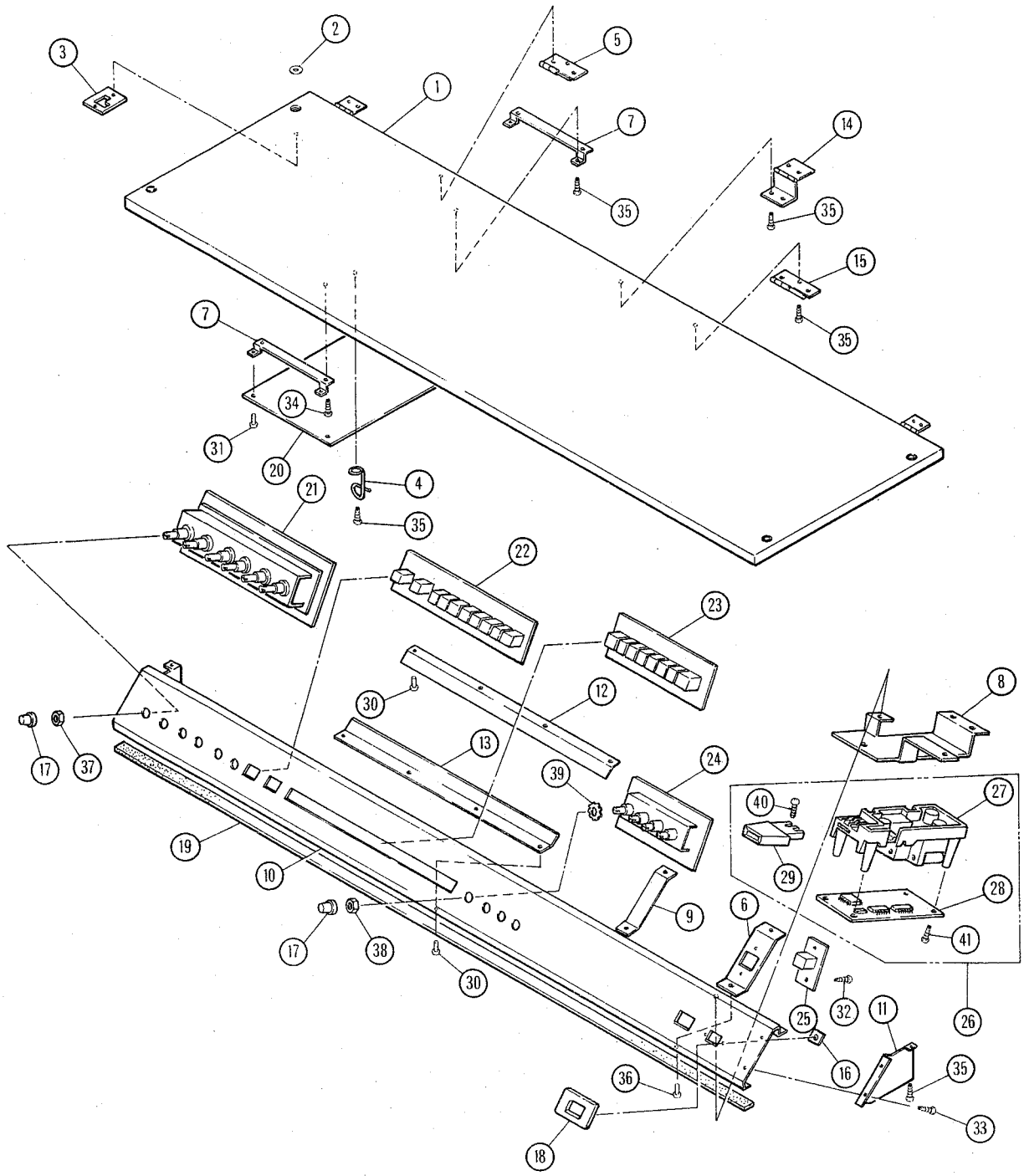

	Ref. No.	Part No.	Description	部品名	Remarks	Common Model	Markets
※	1	DA 80 59 90	Top Board Ass'y	屋根集成			
	2	AA 02 90 40	Washer	皿ワッシャ			
	3	AA 81 46 00	Stay Holder	ステー受け金具		GS1	
	4	AA 81 46 30	D Rack Hook	Dラックフック		GS1	
※	5	AA 81 60 60	D Rack Hinge A	Dラック蝶番A	Male		
※	6	AA 81 60 80	STO Angle	STOアングル			
※	7	AA 81 60 90	P.C.B. Angle	シートアングル			
※	8	AA 81 61 10	C/R Holder	CR取付金具			
※	9	AA 81 62 10	P.C.B. Angle	シート補強アングル			
※	10	AA 81 66 40	Control Panel	コントロールパネル			
※	11	AA 81 66 50	Control Panel Angle	パネル補強アングル			
※	12	AA 81 66 70	SEL Angle A	SELアングルA			
※	13	AA 81 66 80	– do. – B	〃 B			
※	14	AA 81 73 80	Hinge, Top Board	蝶番			
※	15	AA 81 74 00	D Rack Hinge C	Dラック蝶番C	Male		
※	16	AA 81 75 70	Nut	止めナット			
	17	CB 81 01 20	Knob	ツマミ			
※	18	CB 81 81 50	Card Reader Escutcheon	リーダーエスカッション			
※	19	CC 01 51 20	Felt	フェルト			
	20	NA 80 69 60	Circuit Board A #8609	Aシート		GS1	
※	21	NA 80 74 01	– do. – PN-EFF #8639	PN–EFFシート			
※	22	NA 80 74 02	– do. – PN-SEL-L #8637	PN-SEL-Lシート			
※	23	NA 80 74 03	– do. – PN-SEL-R #8637	PN-SEL-Rシート			
※	24	NA 80 74 04	– do. – PN-EQ #8637	PN–EQシート			
※	25	NA 80 74 05	– do. – PN-STO #8637	PN–STOシート			
	26	NB 81 60 60	Card Reader Unit PCR-303S	カードリーダユニット		GS1	
	27	NX 80 01 10	Mech. Unit, Card Reader K90-0799	メカユニット		GS1	
	28	NX 80 01 20	Circuit Board C/R K90-0711	C/Rシート		GS1	
	29	NX 80 01 30	Guide, Card Reader K03-0007	カードリーダ挿入口		GS1	
	30	EB 33 00 60	Flat Head Screw M3 x 6 BL	皿小ネジ			
	31	ED 33 00 50	Bind Screw M3 x 5 – do. –	バインド小ネジ			
	32	ED 33 00 60	– do. – M3 x 6 – do. –	〃			
	33	EF 33 00 80	Oval Head Screw M3 x 8 – do. –	丸皿小ネジ			
	34	Ei 33 00 60	Bind Tapping Screw 3 x 6 – do. –	バインドタッピングネジ			
	35	Ei 33 51 20	– do. – 3.5 x 12 – do. –	〃			
	36	Ei 33 51 60	– do. – 3.5 x 16 – do. –	〃			
	37	EZ 30 70 10	Hexagonal Nut M7	特殊六角ナット			
	38	EZ 30 90 10	– do. – M9	〃			
	39	EV 41 00 70	Toothed Lock Washer A7S	歯付座金			
	40	EX 00 01 00	Tap Tight Screw M2 x 5 XA4-7200507	タップタイトネジ			
	41	EX 00 01 10	– do. – M2.6 x 6 E09-260002	〃			

※ New Parts (新規部品)

C. Pedal Assembly (ペダルAss'y)

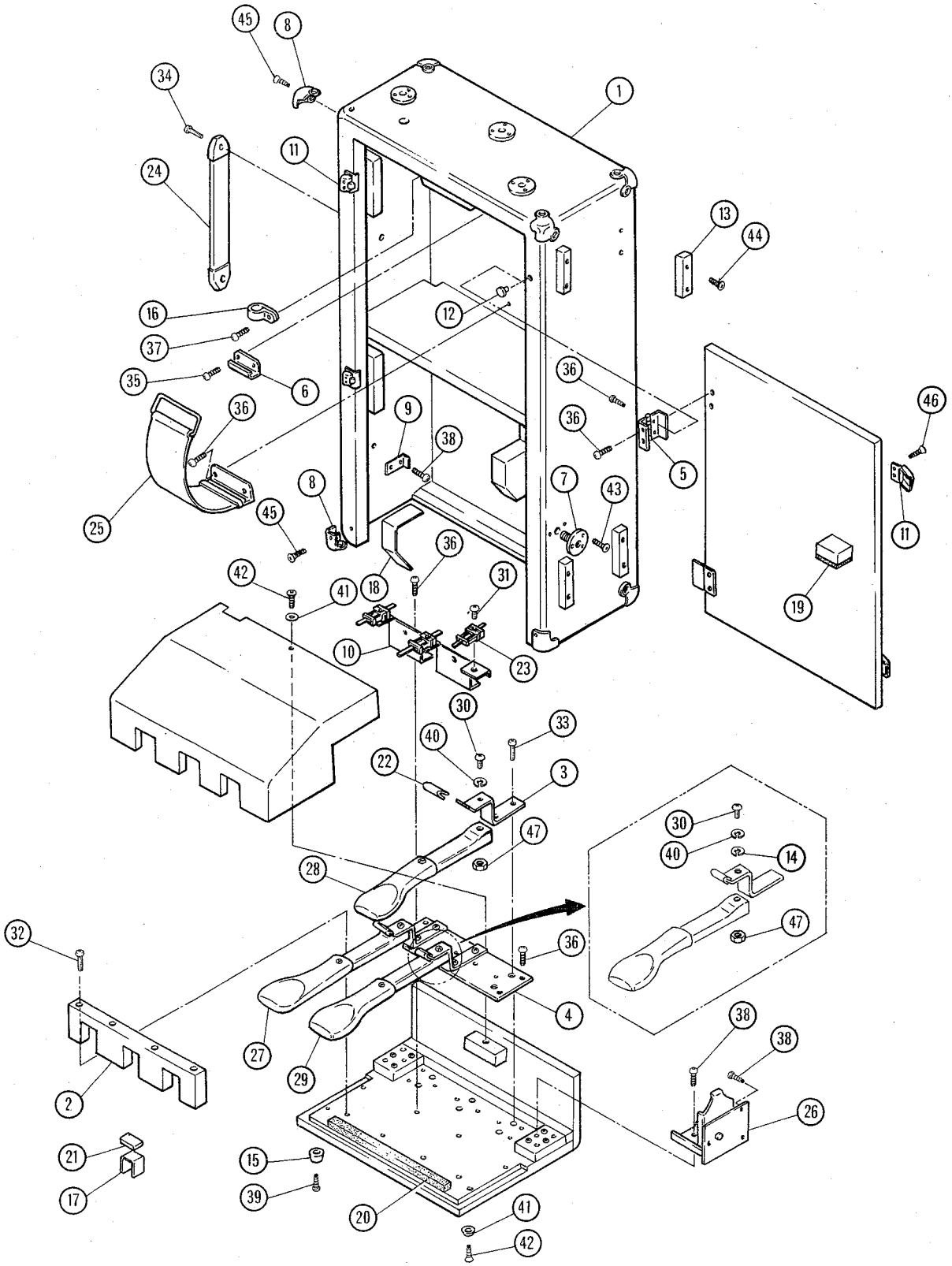

	Ref. No.	Part No.	Description			部品名	Remarks	Common Model	Markets
※		NB 81 69 40	Pedal Unit			ペダル組立			
※	1	DA 80 60 50	Pedal Box Ass'y			ペダル箱集成			
※	2	DA 80 65 30	Pedal Stopper Ass'y			ペダルストッパー集成			
	3	AA 03 60 60	Pedal Spring			板バネ			
	4	AA 03 62 00	Base			ベース			
	5	AA 04 37 50	Hinge, Pedal Box			蝶番			
	6	AA 80 43 20	EXP. Pedal Stopper			引掛金具			
	7	AA 80 42 70	Leg, Nut			脚用ナット			
	8	AA 80 90 50	Corner Metal			コーナー金具			
※	9	AA 81 60 10	Rotary Stopper			ロータリーストッパー			
※	10	AA 81 60 40	Switch Angle			スイッチアングル			
	11	AA 99 00 58	Lock			ダルマパッチン錠			
	12	CB 00 20 50	Rubber Button		BL	ゴムボタン			
	13	CB 01 03 10	Case Leg			脚			
	14	CB 02 82 50	Washer			滑り座金			
※	15	CB 81 81 10	Leg			ゴム脚			
※	16	CB 81 81 20	Nylon Clamp			ナイロンクランプ			
※	17	CC 02 19 20	Pedal Felt			ペダルフェルト			
※	18	CC 02 19 30	Rotaly Stopper Felt			回転止めフェルト			
※	19	CC 02 19 90	Felt			フェルト			
※	20	CD 06 01 70	Pedal Cloth	(L)		ペダルクロス(大)			
※	21	CD 06 01 80	— do. —	(S)		〃 (小)			
※	22	CE 06 50 20	Actuator			アクチェーター			
	23	NB 03 70 40	Tablet Switch			タブレットスイッチ			
	24	NB 80 59 50	Handle Ass'y			取手 Ass'y			
	25	NB 81 67 50	EXP. Pedal Stopper Band			EXPペダル止めバンド			
※	26	NB 81 69 50	Rotary Plate Ass'y			ロータリープレートAss'y			
※	27	NB 81 71 60	Pedal Ass'y	(L)		ペダル Ass'y (左)			
※	28	NB 81 71 70	— do. —	(R)		〃 (右)			
※	29	NB 81 71 80	— do. —	(C)		〃 (中)			
	30	EA 05 01 20	Pan Head Screw	M5 x 12		ナベ小ネジ			
	31	ED 03 01 20	Bind Screw	M3 x 12		バインド小ネジ			
	32	ED 04 03 00	— do. —	M4 x 30		〃			
	33	ED 35 01 00	— do. —	M5 x 10		〃			
	34	EF 25 03 00	Oval Head Screw	M5 x 30	Cr	丸皿小ネジ			
	35	E i 33 01 20	Bind Tapping Screw	3 x 12	BL	バインドタッピングネジ			
	36	E i 33 51 20	— do. —	3.5 x 12	— do. —	〃			
	37	E i 34 01 00	— do. —	4 x 10	— do. —	〃			
	38	E i 34 01 20	— do. —	4 x 12	— do. —	〃			
	39	E i 34 01 50	— do. —	4 x 15	— do. —	〃			
	40	EK 00 31 10	Spring Lock Washer	φ5		皿バネ座金			
	41	EK 00 22 40	Washer	φ4	BL	山型ワッシャー			
	42	EM 34 03 00	Oval Head Tapping Screw	4 x 30	— do. —	丸皿タッピングネジ			
	43	EO 33 01 20	Flat Head Tapping Screw	3 x 12	— do. —	皿タッピングネジ			
	44	EO 33 52 00	— do. —	3.5 x 20	— do. —	〃			
	45	ER 23 11 20	Oval Head Wood Screw	3.1 x 12	Cr	丸皿木ネジ			
	46	ER 23 51 30	— do. —	3.5 x 13	— do. —	〃			
	47	EV 10 00 50	Hexagonal Nut	M5		六角ナット			

※ New Parts (新規部品)

D. D Rack & Power Supply Unit（Dラック及び電源ユニット）

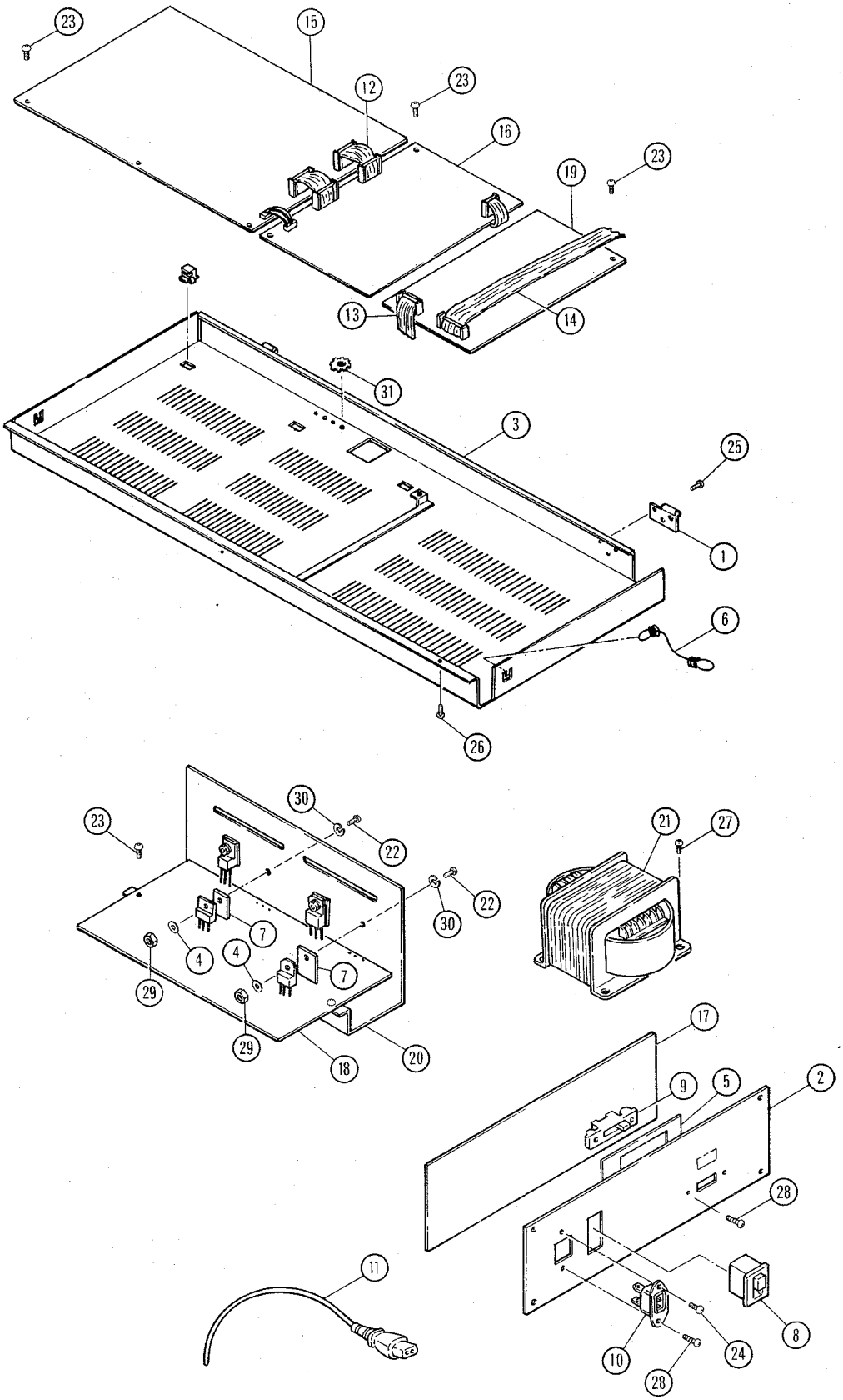

	Ref. No.	Part No.	Description	部品名	Remarks	Common Model	Markets
※	1	AA 81 60 70	D Rack Hinge B	D ラック蝶番 B	Female		
※	2	AA 81 61 70	Power Supply Panel	電源パネル			J
※		AA 81 61 80	— do. —	〃			G
※		AA 81 74 50	— do. —	〃			U, C
※	3	AA 81 61 90	D Rack	D ラック			
	4	CB 07 28 80	Insulation Bushing	絶縁ブッシュ			
	5	CB 81 78 90	Spacer	スペーサー	Voltage Sel.		
※	6	CB 81 82 70	Rack Rope	ラックロープ			
	7	iL 00 05 80	Mica Base	マイカベース			
	8	KA 10 10 60	See-Saw Switch	電源スイッチ	Power		
	9	KA 40 08 30	Voltage Selector	電圧切換器			
	10	LB 20 18 20	AC Inlet 2P	2 P インレット			J, U, C
		LB 20 18 60	— do. — — do. —	〃			G
	11	MG 00 10 30	AC Cord	電源コード			J
		MG 00 10 40	— do. —	〃			U
		MG 00 10 50	— do. —	〃			G
		MG 00 11 20	— do. —	〃			C
	12	MZ 80 85 50	Flat Cable Ass'y FM	FM 線材キット		GS1	
	13	MZ 80 85 80	— do. — TD	TD 〃		GS1	
※	14	MZ 80 93 20	— do. —	線材キット			
	15	NA 80 69 20	Circuit Board FM #8605	FM シート		GS1	
	16	NA 80 69 30	— do. — KC #8606	KC 〃		GS1	
※	17	NA 80 83 50	— do. — AC #8626	AC 〃			J
※		NA 80 83 60	— do. — — do. — — do. —	〃 〃			U, C
※		NA 80 83 70	— do. — — do. — — do. —	〃 〃			G
※	18	NA 80 73 90	— do. — DC #8638	DC 〃			J
※		NA 80 74 60	— do. — — do. — — do. —	〃 〃			U, C
※		NA 80 74 70	— do. — — do. — — do. —	〃 〃			G
※	19	NA 80 74 20	— do. — RW #8608	RW 〃			
	20	NB 81 71 40	Power Supply Unit	電源ユニット			J
		NB 81 72 90	— do. —	〃			U, C
		NB 81 73 00	— do. —	〃			G
	21	NB 81 74 10	Power Transformer Ass'y	電源トランス Ass'y			
	22	EA 02 60 80	Pan Head Screw M2.6 x 8 Ye	ナベ小ネジ			
	23	ED 03 00 60	Bind Screw M3 x 6 — do. —	バインド小ネジ			
	24	ED 33 01 20	— do. — M3 x 12 BL	〃			U, C
	25	ED 34 00 60	— do. — M4 x 6 — do. —	〃			
	26	ED 34 01 00	— do. — M4 x 10 — do. —	〃			
	27	ED 34 01 40	— do. — M4 x 14 — do. —	〃			
	28	Ei 33 01 00	Bind Tapping Screw 3 x 10 — do. —	バインドタッピングネジ			
	29	EV 10 02 60	Hexagonal Nut M2.6 Ye	六角ナット			
	30	EV 30 02 60	Spring Lock Washer ϕ2.6 — do. —	バネ座金			
	31	EV 42 30 40	Toothed Lock Washer B4S BL	歯付座金			

※ New Parts (新規部品)

E. Keyboard Assembly (鍵盤)

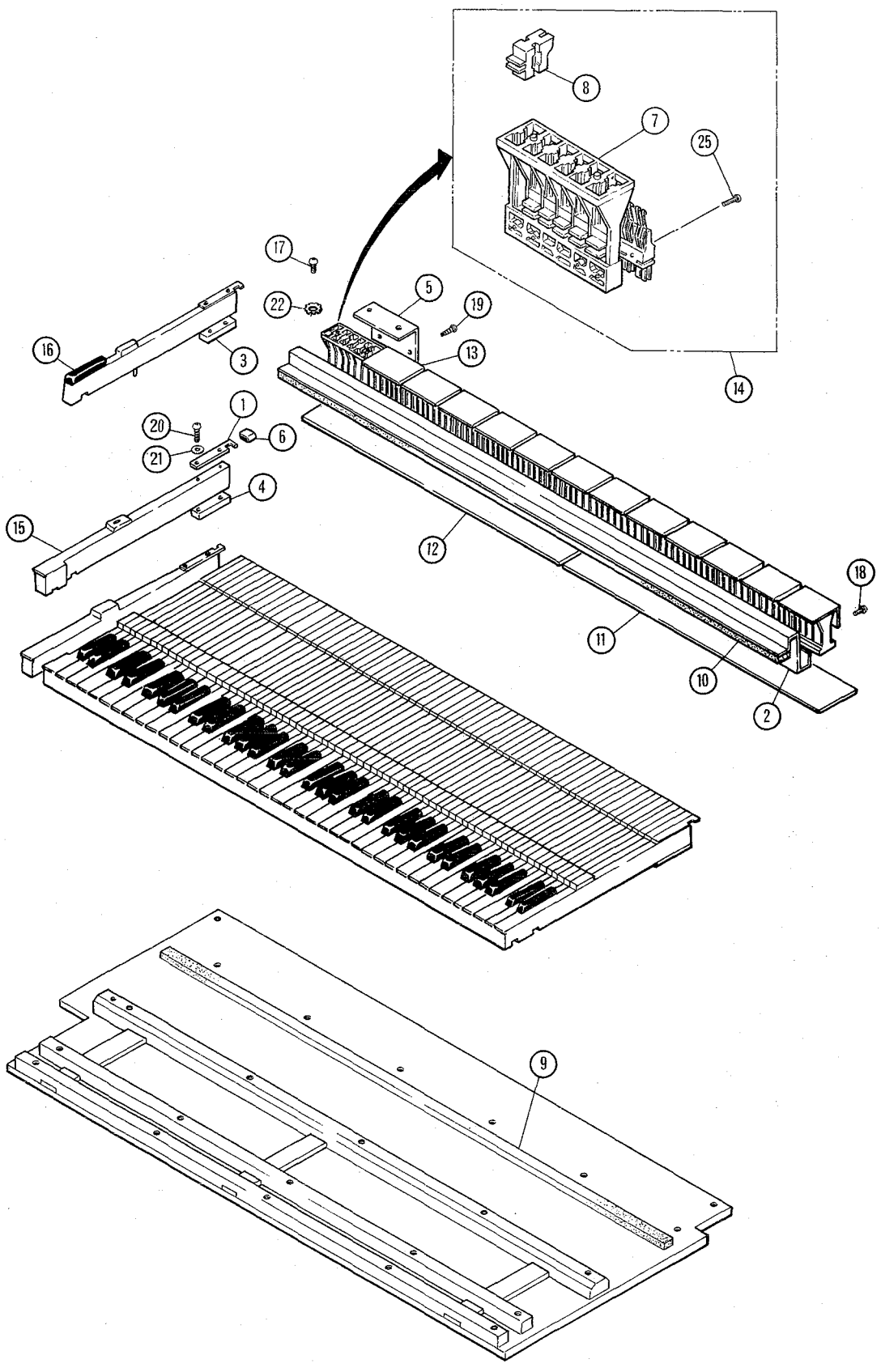

	Ref. No.	Part No.	Description		部品名	Remarks	Common Model	Markets
	1	AA 81 49 80	Actuator Plate		アクチェーター駆動板		GS1	
※	2	AA 81 62 00	Switch Rail		スイッチレール			
	3	BF 00 00 10	Key Weight		キーウェート	Black Key	GS1	
	4	BF 00 00 20	— do. —		〃	White Key	GS1	
	5	CB 81 73 00	Contact Cover		接点カバー		GS1	
	6	CB 81 73 60	Actuator Plate Cap		駆動板キャップ		GS1	
	7	CB 81 73 70	Actuator Guide		アクチェーターガイド		GS1	
	8	CB 81 73 80	Actuator		アクチェーター		GS1	
※	9	CC 01 52 10	Stopper Felt		フェルト	Key Board Rail		
※	10	CD 07 02 40	— do. — II		ストッパーフェルトII	Key Board Stopper		
※	11	NA 80 73 80	Circuit Board	MK3 #8639	MK3シート			
※	12	NA 80 74 10	— do. —	MK4 #8610	MK4シート			
	13	NB 81 61 50	Key Switch Unit I		スイッチユニットI	6	GS1	
	14	NB 81 61 60	— do. — II		〃 II	4	GS1	
※	15	NX 80 02 50	White Key Ass'y	C	白鍵 Ass'y			
※		NX 80 02 60	— do. —	D	〃			
※		NX 80 02 70	— do. —	E	〃			
※		NX 80 02 80	— do. —	F	〃			
※		NX 80 02 90	— do. —	G	〃			
※		NX 80 03 00	— do. —	A	〃			
※		NX 80 03 10	— do. —	B	〃			
※		NX 80 03 20	— do. —	E′	〃	1E		
※	16	NX 80 03 30	Black Key Ass'y		黒鍵 Ass'y			
	17	EA 04 01 00	Pan Head Screw	M4 x 10 Ye	ナベ小ネジ			
	18	ED 03 02 50	Bind Screw	M3 x 25 — do. —	バインド小ネジ			
	19	Ei 03 01 60	Bind Tapping Screw	3 x 16 — do. —	バインドタッピングネジ			
	20	Ei 04 03 50	— do. —	4 x 35 — do. —	〃			
	21	EV 30 00 40	Spring Lock Washer	ϕ4 — do. —	バネ座金			
	22	EV 41 00 40	Toothed Lock Washer	A4S — do. —	歯付座金			

※ New Parts (新規部品)

F. Cabinet（外装）

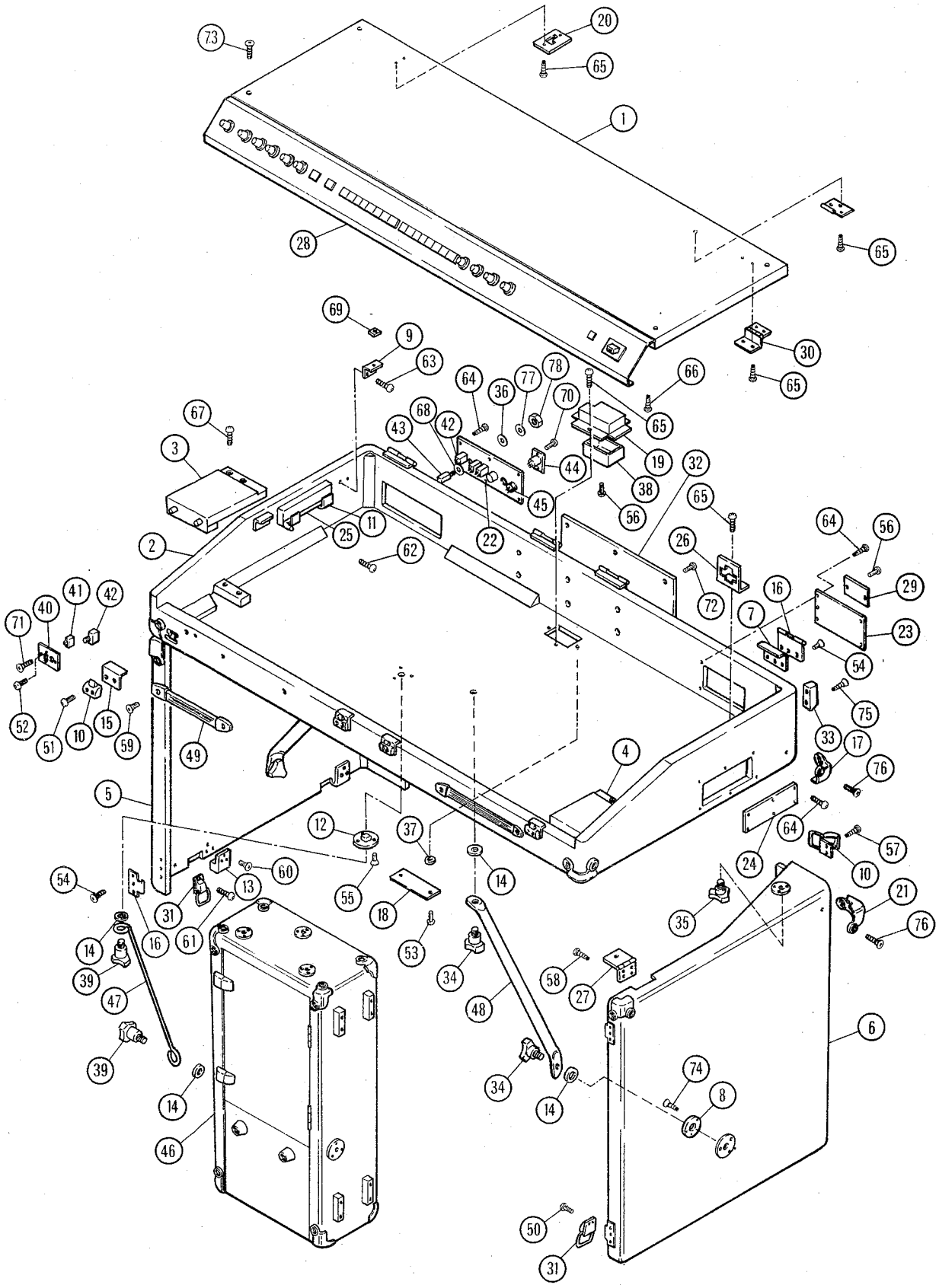

	Ref. No.	Part No.	Description	部品名	Remarks	Common Model	Markets
※	1	DA 80 59 90	Top Board Ass'y	屋根集成			
※	2	DA 80 60 00	Bottom Case Ass'y	底枠集成			
※	3	DA 80 60 10	End Block Ass'y (L)	拍子木集成(左)			
※	4	DA 80 60 20	— do. — (R)	〃 (右)			
※	5	DA 80 60 30	Cover Leg Ass'y (L)	蓋脚集成(左)			
※	6	DA 80 60 40	— do. — (R)	〃 (右)			
	7	AA 01 46 90	Corner Angle	コーナーアングル			
	8	AA 01 58 70	Stay Washer	脚受座金			
	9	AA 04 60 80	Top Board Holder	受け金具			
	10	AA 80 24 50	Lock	パッチン錠			
	11	AA 80 25 40	Stay Stopper	ステー押え金具			
	12	AA 80 42 70	Nut, Leg	脚用ナット			
	13	AA 80 42 90	Slip Fitting	滑り座			
	14	AA 80 46 30	Knob Bolt Ring	脚柱リング			
	15	AA 80 58 10	Corner Angle	コーナーアングル			
	16	AA 80 64 20	Latch Hinge	引掛蝶番			
	17	AA 80 90 50	Corner Metal	コーナー金具			
	18	AA 81 12 60	Cover	蓋		GS1	J
		AA 81 26 00	— do. —	〃		GS1	U, C, G
	19	AA 81 14 00	Battery Cover	バッテリーカバー		GS1	
	20	AA 81 46 00	Stay Holder	ステー受け金具		GS1	
	21	AA 81 47 70	Corner Metal	コーナー金具			
※	22	AA 81 61 40	I/O Panel	I/Oパネル			
※	23	AA 81 61 50	PGM Panel	PGMパネル			
※	24	AA 81 61 70	Power Supply Panel	電源パネル			J
※		AA 81 61 80	— do. —	〃			G
※		AA 81 74 50	— do. —	〃			U, C
※	25	AA 81 62 90	Top Board Stay	屋根ステー			
※	26	AA 81 63 00	Connector Holder	コネクターホルダー			
※	27	AA 81 66 30	Leg Hinge	脚蝶番			
※	28	AA 81 66 40	Control Panel	コントロールパネル			
※	29	AA 81 67 30	Connector Cover	コネクターカバー			
※	30	AA 81 73 80	Hinge, Top Board	蝶番			
	31	AA 99 00 00	Lock	パッチン錠			
	32	BA 50 00 60	Name Plate	ネームプレート		CP-70B CP-80	
	33	CB 01 03 10	Case Leg	脚			
	34	CB 80 83 30	Knob Bolt	ノブネジ			
	35	CB 80 83 40	— do. — M8 x 30	〃			
	36	CB 81 00 90	Insulation Nut	絶縁ナット			
	37	CB 81 29 20	Stopper	グリップ型止め輪			
	38	CB 81 42 40	Battery Case	電池ケース		GS1	
※	39	CB 81 81 30	Knob Bolt	ノブネジ			
※	40	CB 81 81 40	Phones Panel	ホーンパネル			
	41	KA 40 05 00	Slide Switch	スライドスイッチ	Line Out		
	42	LB 20 11 20	Jack	ジャック	Phones, Foot Cont.		
	43	LB 20 15 40	— do. —	〃	Output		
	44	LB 30 01 60	Cannon Socket XLR3-32	キャノンソケット			
※	45	LB 40 08 80	Connector 4P	4Pコネクター	Pedal		
※	46	NB 81 69 40	Pedal Unit	ペダル組立			
※	47	NB 81 69 70	Pedal Stay Ass'y (L)	ペダルステーAss'y(左)			
※		NB 81 69 80	— do. — (R)	〃 (右)			
※	48	NB 81 69 90	Stay Ass'y	脚柱 Ass'y			
※	49	NB 81 75 10	Handle Ass'y	取手 Ass'y			

※ New Parts (新規部品)

Ref. No.	Part No.	Description	部品名	Remarks	Common Model	Markets
50	EA 23 01 40	Pan Head Screw M3 x 14 Cr	ナベ小ネジ			
51	EA 23 02 00	— do. — M3 x 20 — do. —	〃			
52	EA 32 60 60	— do. — M2.6 x 6 BL	〃			
53	EA 33 02 00	— do. — M3 x 20 — do. —	〃			
54	EB 23 01 40	Flat Head Screw M3 x 14 Cr	皿小ネジ			
55	EB 33 01 60	— do. — M3 x 16 BL	〃			
56	ED 33 00 60	Bind Screw M3 x 6 — do. —	バインド小ネジ			
57	ED 33 01 40	— do. — M3 x 14 — do. —	〃			
58	ED 34 02 00	— do. — M4 x 20 — do. —	〃			
59	EF 25 03 50	Oval Head Screw M5 x 35 Cr	丸皿小ネジ			
60	EF 33 01 60	— do. — M3 x 16 BL	〃			
61	E i 23 01 40	Bind Tapping Screw 3 x 14 Cr	バインドタッピングネジ			
62	E i 33 00 80	— do. — 3 x 8 BL	〃			
63	E i 33 01 20	— do. — 3 x 12 — do. —	〃			
64	E i 33 51 00	— do. — 3.5 x 10 — do. —	〃			
65	E i 33 51 20	— do. — 3.5 x 12 — do. —	〃			
66	E i 33 51 60	— do. — 3.5 x 16 — do. —	〃			
67	E i 34 02 00	— do. — 4 x 20 — do. —	〃			
68	EK 00 23 70	Fiber Washer	ファイバーワッシャ			
69	EK 00 34 90	Speed Nut	J型スピードナット			
70	EM 23 00 60	Oval Head Tapping Screw 3 x 6 Cr	丸皿タッピングネジ			
71	EM 33 01 20	— do. — 3 x 12 BL	〃			
72	EM 33 51 20	— do. — 3.5 x 12 — do. —	〃			
73	EM 35 03 00	— do. — 5 x 30 — do. —	〃			
74	EO 33 01 20	Flat Head Tapping Screw 3 x 12 — do. —	皿タッピングネジ			
75	EO 33 52 00	— do. — 3.5 x 20 — do. —	〃			
76	ER 23 11 20	Oval Head Wood Screw 3.1 x 12 Cr	丸皿木ネジ			
77	LX 20 00 10	Flat Washer φ9	特殊平座金			
78	LX 20 00 20	Hexagonal Nut M9	特殊六角ナット			

※ New Parts (新規部品)